NILES BUILDING PRODUCTS

Specialists in Metal and Vinyl Building Products

STEEL AND ZINC CATALOG

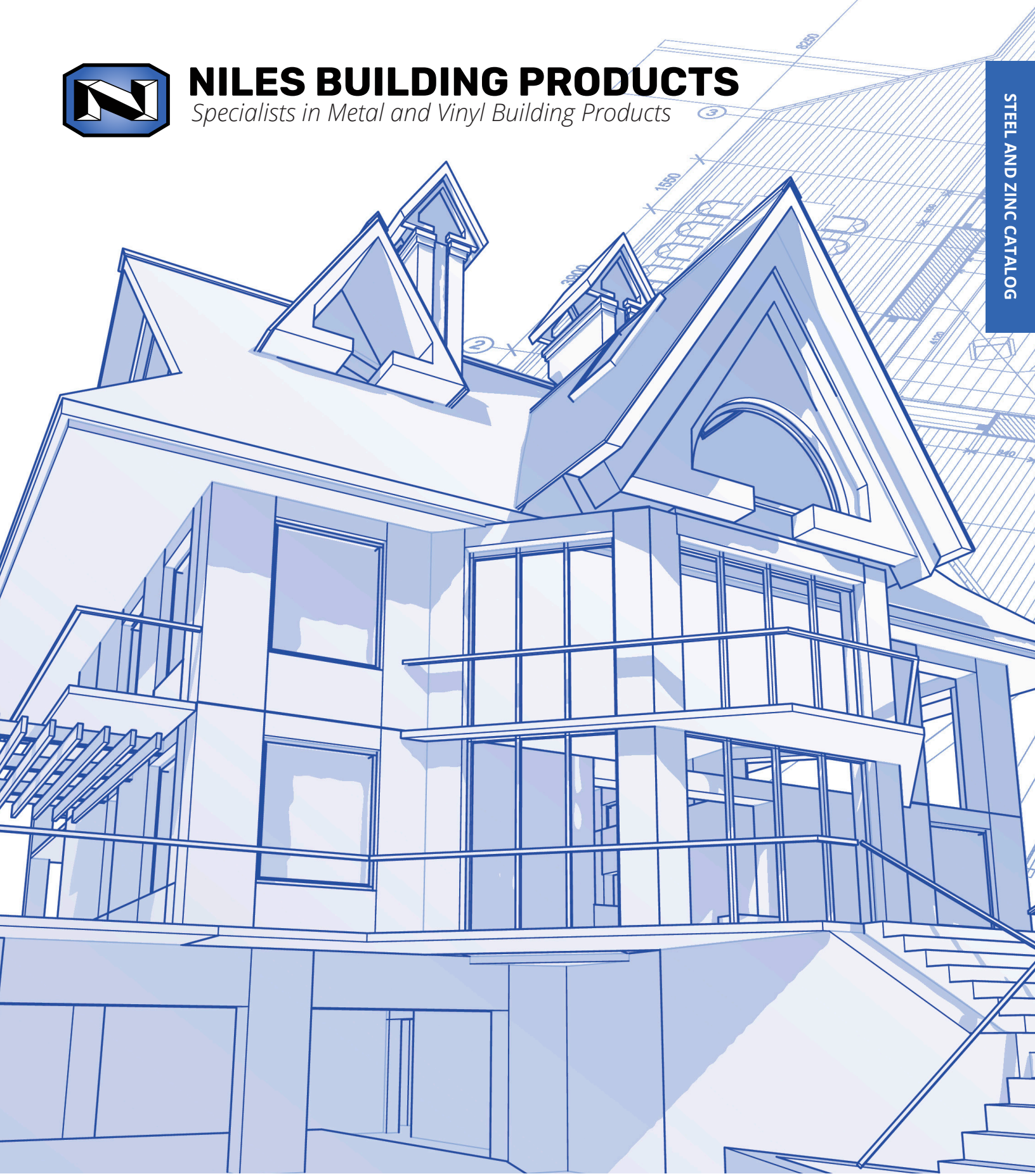

Niles Facility
1600 Hunter Street
Niles, OH 44446

Jacksonville Facility
8441 Western Way
Jacksonville, FL 32256

Dallas-Fort Worth Facility
2303 I-30 Frontage Road Ste 100
Grand Prairie, TX 75050

Southern California Facility
1270 North Grove Street
Anaheim, CA 92806

nilesbldg.com • 800-323-3329

About Niles Building Products

We are the industry leader in manufacturing expanded metal and vinyl accessories for stucco, plaster, drywall and veneer plaster applications.

JACKSONVILLE, FL

NILES, OH

DALLAS-FORT WORTH, TX

ANAHEIM, CA

Incorporated in Niles, OH in 1973 with just one production line and four employees, Niles Building Products has grown to become an industry leader in expanded metal and vinyl accessories—with manufacturing facilities in Niles, OH, Jacksonville, FL, Grand Prairie, TX, and Anaheim, CA.

Niles Building Products is a service-oriented company, focused on high quality products while maintaining low overhead. Our distinction and reputation in the walls and ceilings industry are defined by the personal attention we give every inquiry and order.

Expanded metal and vinyl building products are our specialty. Our skills and experience are the key to manufacturing products that maintain the exemplary quality levels our customers expect and depend upon. Our customers have come to depend on us to provide high quality products, competitively priced and delivered in a timely fashion. Make Niles Building Products your first choice in expanded metal and vinyl products.

ASTM INTERNATIONAL MEMBER

FWCCA

AWCI

TLPCA

Table of Contents

METAL STUCCO ACCESSORIES

WEEP SCREED

#7 FHA Foundation Weep Screed page 4
#36 Foundation Sill Screed page 4

CORNER BEADS

Niles 1-A Corner Bead page 5
Niles 2-A Corner Bead page 5
Wire Corner Beads page 5

CASING BEADS

Niles No. 66X Expanded Flange Casing Bead page 6
Niles No. 66N Short Flange Casing Bead page 7
J Metal page 8

EXPANSION CONTROL JOINTS

Double 'V' Expansion Control Joint page 9
Double 'V' Inside Corner Expansion Control Joint page 9
Double 'J' Expansion Control Joint page 10
Niles Zinc Control Joint page 10
Niles Two-Piece Tru-Joint page 11
M-Slide Two-Piece Expansion Joint page 11

MISCELLANEOUS ACCESSORIES

Niles Cornerite page 12
Niles Strip Lath page 12
Niles Lath Patches page 13

METAL LATH

Flat Lath page 14
Dimpled Lath page 14
V-Groove Lath page 15
Paper Back Lath page 15
3/8" Hi-Rib Lath page 16
Zinc Lath page 16

PLASTER/DRYWALL ACCESSORIES

Niles Mini-Bead 800/900 page 17
Niles 'L'-Trim & Niles 'J'-Trim page 17
Niles 093 Zinc Control Joint page 18

DRYWALL FRAMING ACCESSORIES

Niles Drywall Corner Bead page 19
Niles Resilient Channel page 19
Niles Furring Channel page 20
U-Channel CRC (Cold Rolled Channel) page 20
Niles Flat Stock page 21
Niles Corner Angle page 21

SECURITY PANELS

Expanded Metal Security Panel page 22

STAINLESS STEEL PRODUCTS

Niles Stainless Steel Flat Lath page 23
Niles Stainless Steel 1-A Corner Bead page 23
Niles Stainless Steel No. 66X Casing Bead page 24
Niles Stainless Steel Double 'J' Expansion Control Joint page 24
Niles Stainless Steel Double 'V' Expansion Control Joint page 25
Niles Stainless Steel #7 FHA Foundation Weep Screed page 25

SPECIFICATIONS

Metal Lath & Accessories page 26

Metal Stucco Accessories

Weep Screed

#7 FHA FOUNDATION WEEP SCREED

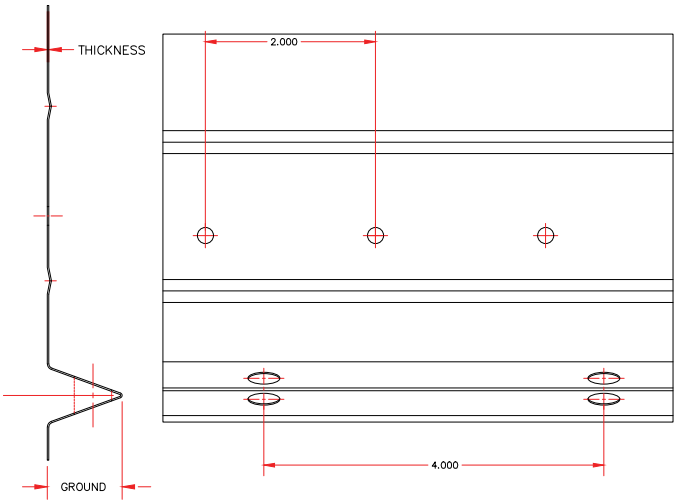

The #7 FHA Foundation Weep Screed is used to provide a weep mechanism as part of the drainage system as required at the bottom of all framed walls; by all major building codes and the International Building Code in ASTM C1063. The larger holes in the ground flange are drainage holes as the entire surface of the sloped ground provides for drainage once the stucco has hydrated and shrinkage has occurred. The 3-1/2" nailing flange serves as a flashing when water resistant, breathable building paper or paper backed lath is installed over the flange.

#7 FHA FOUNDATION WEEP SCREED	CRTNS/ PALLET	NOMINAL LBS/ CRTN	NOMINAL WT/ PALLET**
1/2" GALV. 1/2" ZINC*	25 25	80 82	2000 2050
5/8" GALV. 5/8" ZINC*	25 25	83 86	2075 2150
3/4" GALV. 3/4" ZINC*	25 25	88 91	2200 2275
7/8" GALV. 7/8" ZINC*	25 25	92 96	2300 2400
1" GALV 1" ZINC*	25 25	96 100	2400 2500

25 PCS/CRTN – 250 FT/CRTN
ALSO AVAILABLE IN 10 PIECE BUNDLES.
STANDARD G60 COATING. G90 AVAILABLE UPON REQUEST.
*Minimum quantities apply. Consult with sales before ordering.
**Pallet weights may vary.

#36 FOUNDATION SILL SCREED

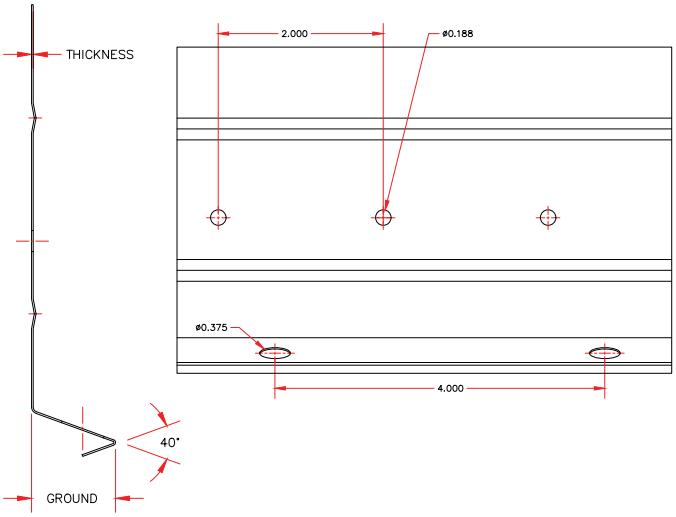

Sill Screed is used so trowel can access underneath the screed to clean excess stucco material.

#36 FOUNDATION SILL SCREED	CRTNS/ PALLET	NOMINAL LBS/ CRTN	NOMINAL WT/ PALLET*
1/2"	25	65	1625
3/4"	25	75	1875
7/8"	25	75	1875

25 PCS/CRTN – 250 FT/CRTN
STANDARD G60 COATING. G90 AVAILABLE UPON REQUEST.
*Pallet weights may vary.

Corner Beads

NILES 1-A CORNER BEAD

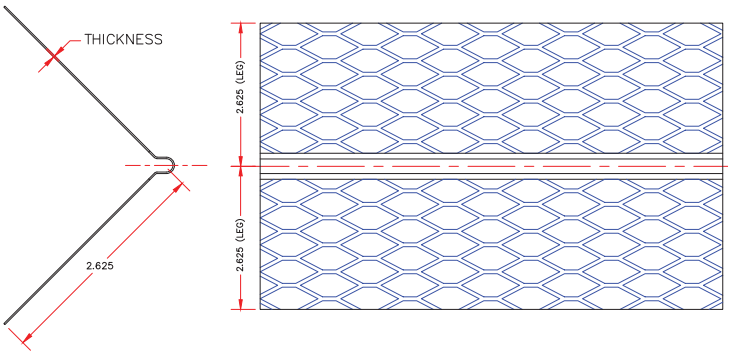

Wing size 2-5/8" x 2-5/8". Used to reinforce external corners in Portland cement stucco applications. The 2-5/8" expanded flanges allow for complete embedment of the entire bead, especially near the nose where strength is needed most. Available in hot-dipped galvanized and 99% pure zinc alloy.

NILES 1-A CORNER BEAD	CRTNS/ PALLET	NOMINAL LBS/CRTN	NOMINAL WT/ PALLET*
10′ GALV.	40	40	1600
10′ ZINC.	40	45	1800

30 PCS/CRTN – 300 FT/CRTN
STANDARD G60 COATING. G90 AVAILABLE UPON REQUEST.
OTHER LENGTHS AVAILABLE ON A SPECIAL-ORDER BASIS
*Pallet weights may vary.

NILES 2-A CORNER BEAD

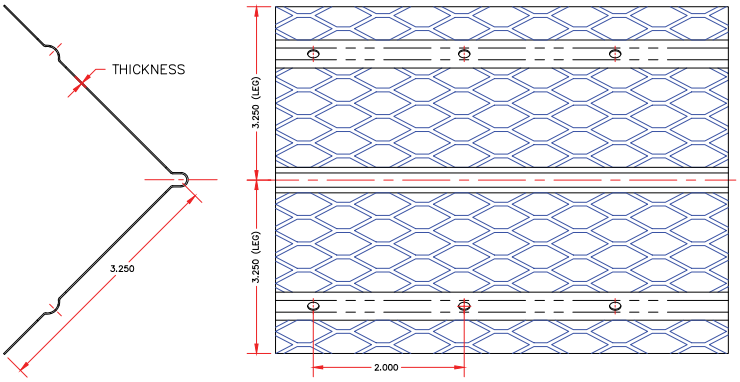

Wider, reinforced flange of the Niles 2-A Corner Bead provides additional rigidity and strength superior to the Niles 1-A, thus allowing for easier installation.

NILES 2-A CORNER BEAD	CRTNS/ PALLET	NOMINAL LBS/CRTN	NOMINAL WT/ PALLET**
10′ GALV.	25	61	1525
10′ ZINC.*	25	63	1575

30 PCS/CRTN – 300 FT/CRTN
STANDARD G60 COATING. G90 AVAILABLE UPON REQUEST.
*Minimum quantities apply. Consult with sales before ordering.
**Pallet weights may vary.

WIRE CORNER BEADS

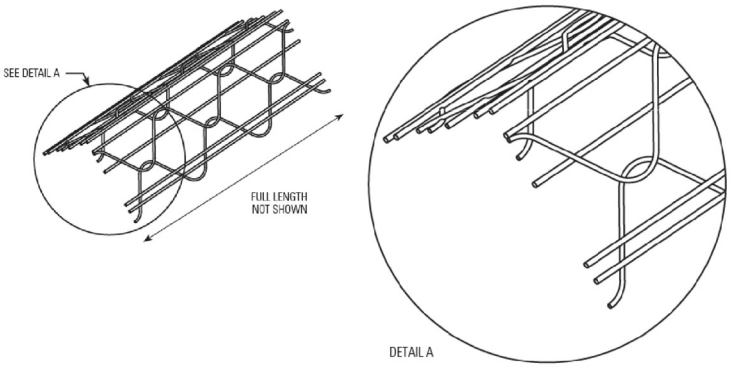

WIRE CORNER BEADS	CRTNS/ PALLET	NOMINAL LBS/CRTN	NOMINAL WT/ PALLET*
Straight 10′	24	40	960
Straight Arch 10′	24	40	960
Straight Short Flange 10′	24	40	960
Bullnose 10′	24	40	960

40 PCS/CRTN – 400 FT/CRTN
*Pallet weights may vary.

Casing Beads

NILES NO. 66X EXPANDED FLANGE CASING BEAD

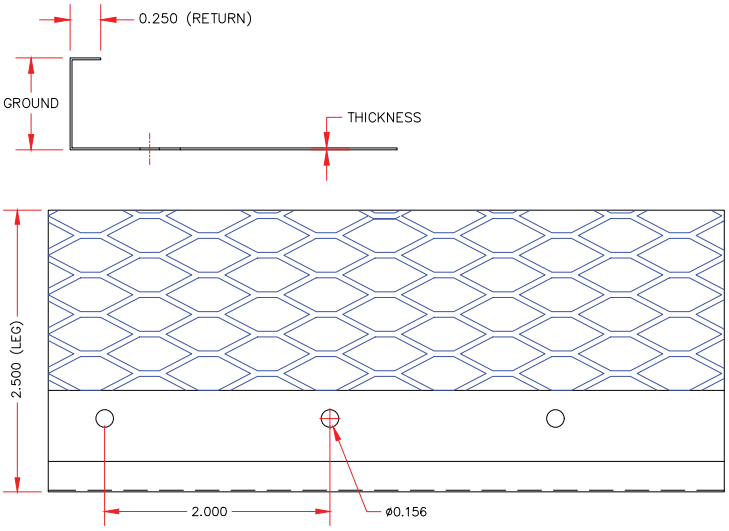

Used to effectively terminate plaster edge and/or to separate stucco from all other structural membranes at doors, windows and other openings; also when plaster/stucco meets dissimilar material. Expanded flange provides excellent stucco embedment at the junctions of the bead and metal lath.

Also available with punched grounds upon request. Caution: 66X Casing Beads with punched grounds should not be used as a substitute for #7 FHA Foundation Weep Screed in a 3-coat stucco system.

NILES NO. 66X EXPANDED FLANGE	CRTNS/ PALLET	NOMINAL LBS/CRTN	NOMINAL WT/ PALLET*
1/4" GALV. 1/4" ZINC*	42 42	41 43	1722 1806
3/8" GALV. 3/8" ZINC*	42 42	41 43	1722 1806
1/2" GALV. 1/2" ZINC*	42 42	41 43	1722 1806
5/8" GALV. 5/8" ZINC*	42 42	48 47	2016 1975
3/4" GALV. 3/4" ZINC*	42 42	48 47	2016 1975
7/8" GALV. 7/8" ZINC*	42 42	48 51	2016 2142
1" GALV. 1" ZINC*	42 42	48 51	2016 2142
1-1/4" GALV. 1-1/4" ZINC*	40 40	50 54	2000 2160
1-3/8" GALV. 1-3/8" ZINC*	40 40	55 61	2200 2440
1-1/2" GALV. 1-1/2" ZINC*	40 40	55 61	2200 2440

30 PCS/CRTN – 300 FT/CRTN
STANDARD G60 COATING. G90 AVAILABLE UPON REQUEST.
*Pallet weights may vary.

Casing Beads con't

NILES NO. 66N SHORT FLANGE CASING BEAD

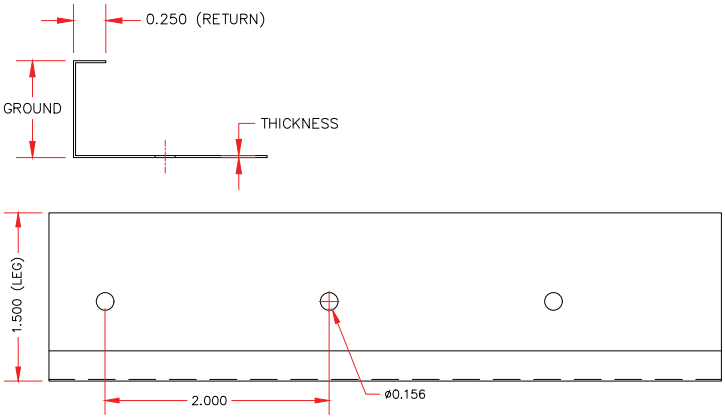

The choice where short, solid flanges are preferable.

Also available with punched grounds.

NILES NO. 66N SHORT FLANGE	CRTNS/ PALLET	NOMINAL LBS/CRTN	NOMINAL WT/ PALLET**
1/4" GALV. 1/4" ZINC*	42 42	47 46	1974 1932
3/8" GALV. 3/8" ZINC*	42 42	49 46	2058 1932
1/2" GALV. 1/2" ZINC*	42 42	50 47	2100 1974
5/8" GALV. 5/8" ZINC*	42 42	50 47	2100 1974
3/4" GALV. 3/4" ZINC*	42 42	53 49	2226 2058
7/8" GALV. 7/8" ZINC*	42 42	54 50	2268 2100
1" GALV. 1" ZINC*	42 42	55 52	2310 2184
1-1/4" GALV. 1-1/4" ZINC*	40 40	62 59	2480 2360
1-3/8" GALV. 1-3/8" ZINC*	40 40	64 60	2560 2400
1-1/2" GALV. 1-1/2" ZINC*	40 40	65 61	2600 2440

30 PCS/CRTN – 300 FT/CRTN
STANDARD G60 COATING. G90 AVAILABLE UPON REQUEST.
*Special orders only. Minimum quantities apply.
**Pallet weights may vary.

Casing Beads con't

J METAL

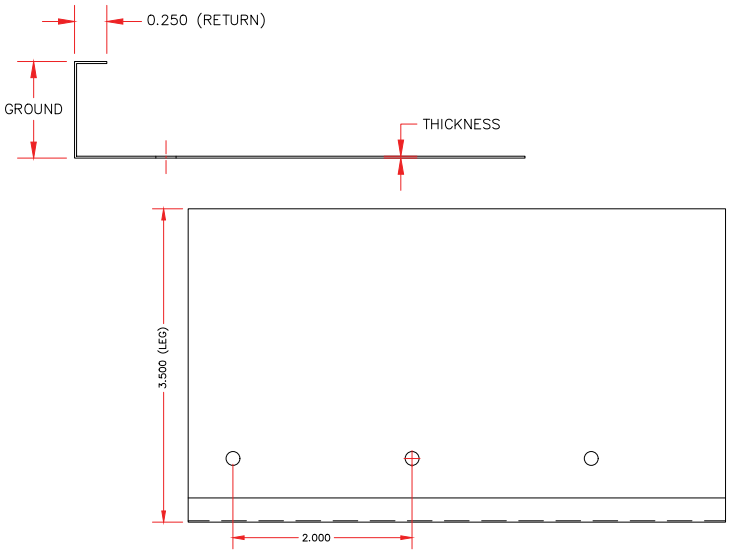

The choice where longer, solid flanges are preferable.

Also available with punched grounds (J-Weep).

J METAL	CRTNS/ PALLET	NOMINAL LBS/CRTN	NOMINAL WT/ PALLET*
3/8" GALV. 3/8" ZINC*	42 42	83 80	3486 3360
1/2" GALV. 1/2" ZINC*	42 42	86 83	3612 3486
5/8" GALV. 5/8" ZINC*	42 42	89 85	3738 3570
3/4" GALV. 3/4" ZINC*	42 42	93 89	3906 3738
7/8" GALV. 7/8" ZINC*	42 42	94 91	3948 3822
1" GALV. 1" ZINC*	42 42	95 92	3990 3864
1-3/8" GALV. 1-3/8" ZINC*	40 40	100 97	4000 3880
1-1/2" GALV. 1-1/2" ZINC*	40 40	103 100	4120 4000

30 PCS/CRTN – 300 FT/CRTN
ALSO AVAILABLE IN 10 PIECE BUNDLES.
STANDARD G60 COATING. G90 AVAILABLE UPON REQUEST.
*Special order only. Minimum quantities apply.

Expansion Control Joints

DOUBLE 'V' EXPANSION CONTROL JOINT

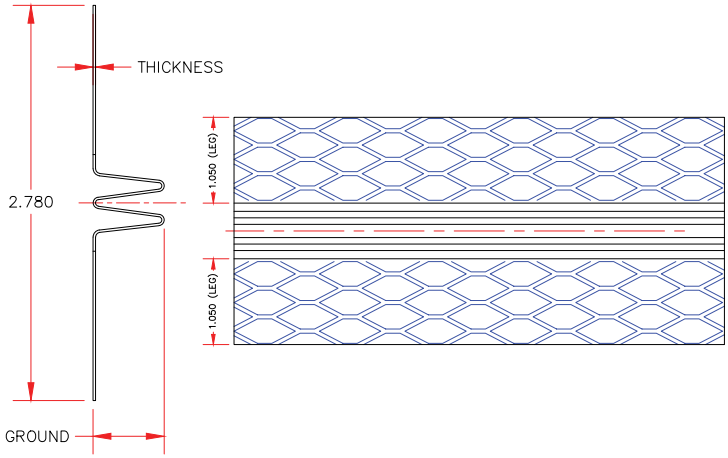

Niles Double 'V' Expansion Control Joints are used to provide mechanism for movement to accommodate expansion and contraction caused by initial stucco shrinkage and minor thermal movement.

DOUBLE 'V' EXPANSION CONTROL JOINT	CRTNS/ PALLET	NOMINAL LBS/CRTN	NOMINAL WT/ PALLET*
1/4" GALV. 1/4" ZINC	42 42	37 39	1544 1638
3/8" GALV. 3/8 ZINC	42 42	37 39	1554 1638
1/2" GALV. 1/2" ZINC	40 40	52 54	2080 2160
5/8" GALV. 5/8" ZINC	40 40	55 57	2200 2280
3/4" GALV. 3/4" ZINC	40 40	68 71	2720 2840
7/8" GALV. 7/8" ZINC	40 40	70 72	2800 2880

24 PCS/CRTN – 240 FT/CRTN
STANDARD G60 COATING. G90 AVAILABLE UPON REQUEST.
*Pallet weights may vary.

NILES DOUBLE 'V' INSIDE CORNER EXPANSION CONTROL JOINT

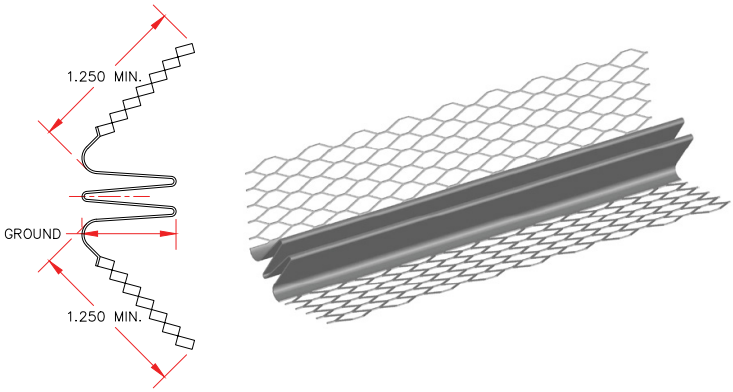

Similar to the standard Double 'V', Niles Double 'V' Inside Corner Expansion Control Joint is roll formed to fit inside corner locations.

DOUBLE 'V' INSIDE CORNER EXPANSION CONTROL JOINT	CRTNS/ PALLET	NOMINAL LBS/CRTN	NOMINAL WT/ PALLET*
1/2" GALV. 1/2" ZINC	40 40	52 54	2080 2160
5/8" GALV. 5/8" ZINC	40 40	55 57	2200 2280
3/4" GALV. 3/4" ZINC	40 40	68 71	2720 2840
7/8" GALV. 7/8" ZINC	40 40	70 72	2800 2880

24 PCS/CRTN – 240 FT/CRTN
STANDARD G60 COATING. G90 AVAILABLE UPON REQUEST.
*Pallet weights may vary.

Expansion Control Joints con't

NILES DOUBLE 'J' EXPANSION CONTROL JOINT

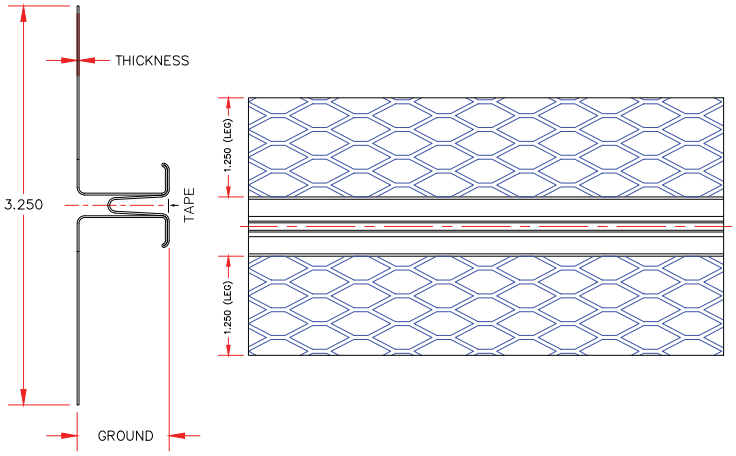

Like the Double 'V', the Double 'J' is also used to provide a mechanism for movement to accommodate expansion and contraction caused by initial stucco shrinkage and minor thermal movement. The Double 'J'-shaped shoulders provide a more secure stucco bond. Comes pre-taped to ensure a clean finish.

DOUBLE 'J' EXPANSION CONTROL JOINT	CRTNS/ PALLET	NOMINAL LBS/CRTN	NOMINAL WT/ PALLET**
1/2" GALV. 1/2" ZINC*	40 40	68 71	2720 2840
3/4" GALV. 3/4" ZINC*	40 40	69 72	2760 2880
7/8" GALV. 7/8" ZINC*	40 40	80 79	3200 3160

24 PCS/CRTN – 240 FT/CRTN
STANDARD G60 COATING. G90 AVAILABLE UPON REQUEST.
*Special order only. Minimum quantities apply.
**Pallet weights may vary.

NILES ZINC CONTROL JOINT

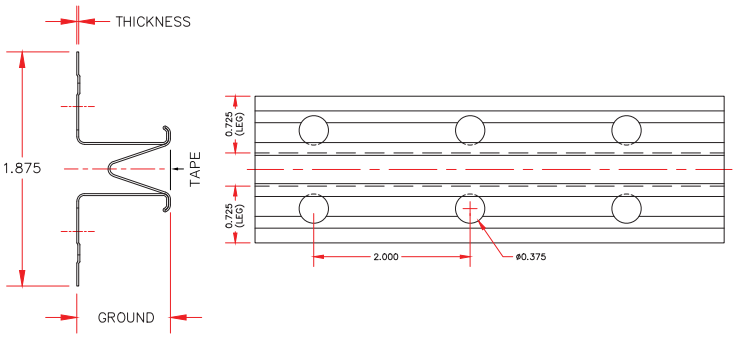

Niles Zinc Control Joint is used to provide a mechanism for movement to accommodate expansion and contraction caused by initial stucco shrinkage and minor thermal movement. The 'J'-shaped shoulder provides excellent stucco bonding. Comes pre-taped to ensure a clean finish.

NILES ZINC CONTROL JOINT	CRTNS/ PALLET	NOMINAL LBS/CRTN	NOMINAL WT/ PALLET*
C380 - 3/8"	20	63	1260
C500 - 1/2"	20	65	1300
C750 - 3/4"	20	75	1500

25 PCS/CRTN – 250 FT/CRTN
*Pallet weights may vary.

Expansion Control Joints con't

NILES TWO-PIECE TRU-JOINT

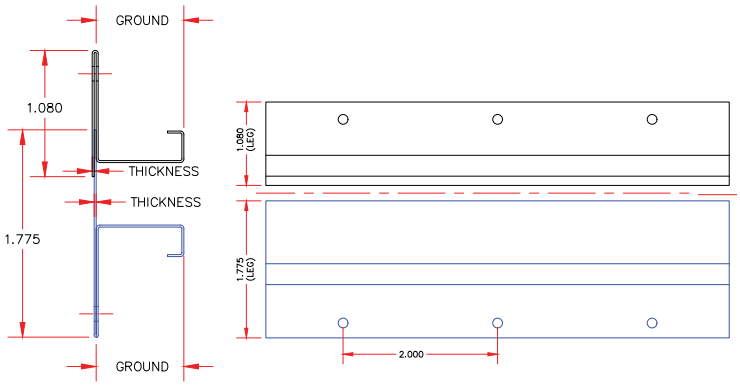

NILES TWO-PIECE TRU JOINT	CRTNS/ PALLET	NOMINAL LBS/CRTN	NOMINAL WT/ PALLET*
1/2" GALV. 1/2" ZINC	25 25	64 66	1600 1650
3/4" GALV. 3/4" ZINC	25 25	68 67	1700 1675
7/8" GALV. 7/8" ZINC	25 25	72 71	1800 1775

15 PCS/CRTN – 150 FT/CRTN
STANDARD G60 COATING. G90 AVAILABLE UPON REQUEST.
*Pallet weights may vary.

The Niles Two-Piece Tru-Joint is used to relieve stress caused by expansion and contraction and initial stucco shrinkage. The opening adjusts from 1/4" to 5/8" and is ideally used where more movement is expected than would be normal with a one-piece expansion control joint.

M-SLIDE TWO-PIECE EXPANSION JOINT

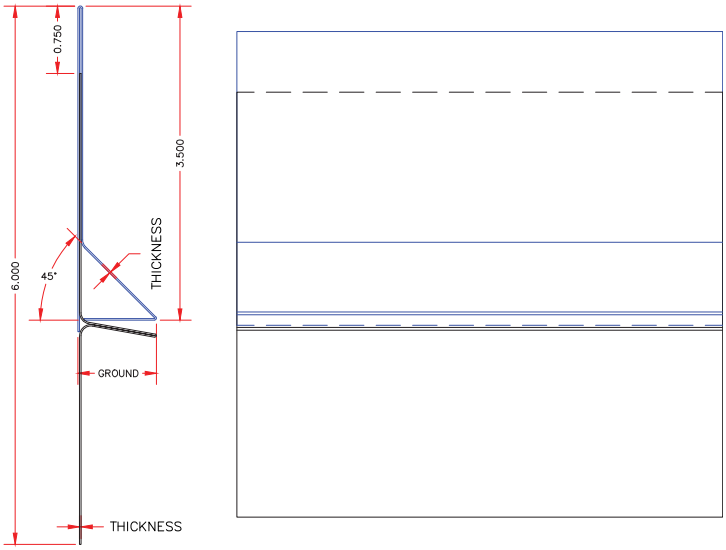

M-SLIDE TWO-PIECE EXPANSION JOINT	PCS/CRTN	LBS/CRTN
7/8"	10	50

100 FT/CRTN

The M-Slide Two-Piece Expansion Joint is manufactured for applications where movement is anticipated. The two-piece design allows for 1-inch vertical movement while allowing water to egress from the wall.

Manufactured from G-90 coated material.
Manufactured by CEMCO.

Miscellaneous Accessories

NILES CORNERITE

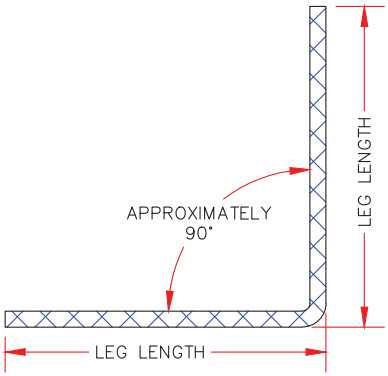

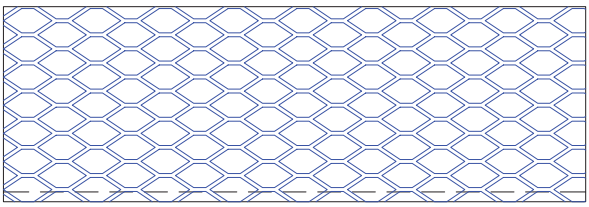

NILES CORNERITE	PCS/ CRTN	FT/ CRTN	CRTNS/ PALLET	NOMINAL LBS/CRTN	NOMINAL WT/ PALLET*
2″ GALV. 4′	150	600′	18	57	1026
2″ GALV. 8′	75	600′	18	57	1026
3″ GALV. 8′	75	600′	18	76	1368

FABRICATED WITH 26 GA, G60. G90 AVAILABLE AS A SPECIAL ORDER.
*Pallet weights may vary.

Used to reinforce and straighten inside metal lath installations to provide strength and smoothness to this critical area.

NILES STRIP LATH

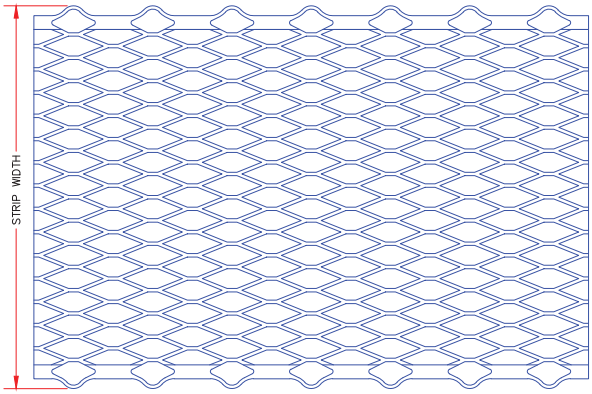

NILES STRIP LATH	PCS/ CRTN	FT/ CRTN	CRTNS/ PALLET	NOMINAL LBS/CRTN	NOMINAL WT/ PALLET*
4″ GALV. 8′	75	600′	18	56	1008
6″ GALV. 8′	75	600′	18	76	1368

FABRICATED WITH 26 GA, G60. G90 AVAILABLE AS A SPECIAL ORDER.
*Pallet weights may vary.

Miscellaneous Accessories con’t

NILES LATH PATCHES

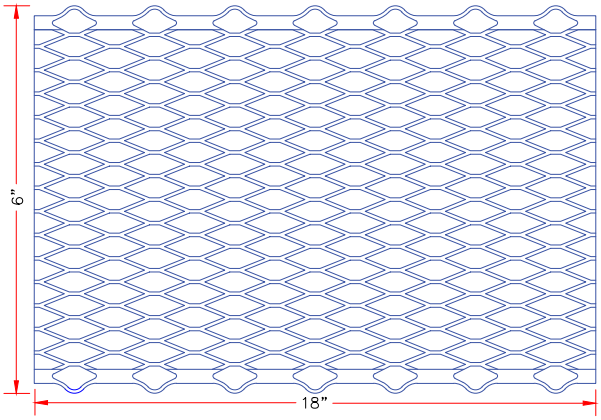

NILES LATH PATCHES	PCS/ CRTN	CRTNS/ PALLET	NOMINAL LBS/CRTN	NOMINAL WT/ PALLET*
6” GALV. 18”	200	30	38	1140

*Pallet weights may vary.

Niles Lath Patches are manufactured to meet 2.5 lath material requirements. They are used over door and window corners to help reduce cracking. Similar to 6" Niles Strip Lath, but in shorter lengths. The Niles Lath Patches are manufactured from 26 gage steel with a standard G60 coating. G90 coating is available upon special request.

Metal Lath

FLAT LATH

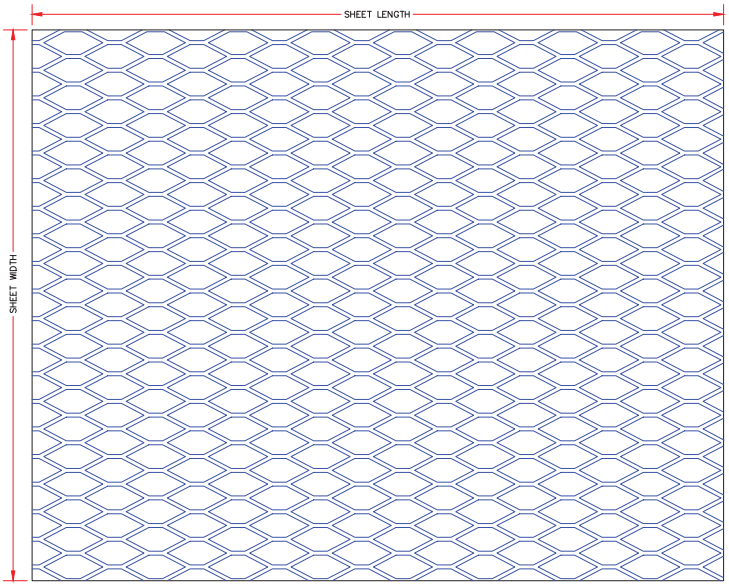

WEIGHT/ SQ YD	SHEET SIZE	PCS/ BNDL	BNDLS/ PALLET
2.5	27″ x 97″	10	25
3.4	27″ x 97″	10	25

500 SQ YDS/PALLET
STANDARD G60 COATING. G90 AVAILABLE UPON REQUEST.
1.75 LATH ALSO AVAILABLE, PLEASE CALL FOR DETAILS.

The Niles Diamond Mesh Flat Lath is a versatile metal lath ideal as a plaster base and reinforcement for all type of walls, ceilings, ornamental figures and fireproofing of steel beams and columns.

DIMPLED LATH

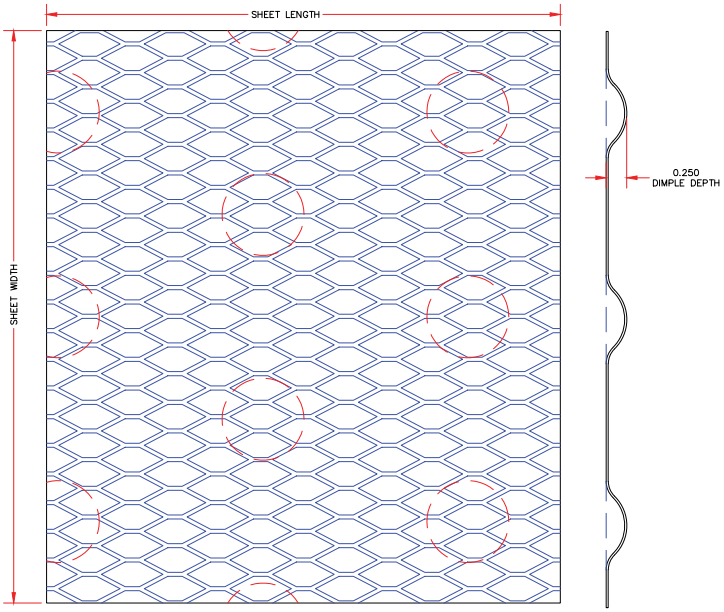

WEIGHT/ SQ YD	SHEET SIZE	PCS/ BNDL	BNDLS/ PALLET
2.5	27″ x 97″	10	25
3.4	27″ x 97″	10	25

500 SQ YDS/PALLET
STANDARD G60 COATING. G90 AVAILABLE UPON REQUEST.
1.75 LATH ALSO AVAILABLE, PLEASE CALL FOR DETAILS.

The Niles Dimpled Lath provides a 1/4" indentation in the metal lath to hold away from the sheathing base and reinforcement (plaster embedment) for all types of walls and fireproofing of steel beam and columns. Provides ample keying for scratch coat and is commonly used for plaster machine application.

V-GROOVE LATH

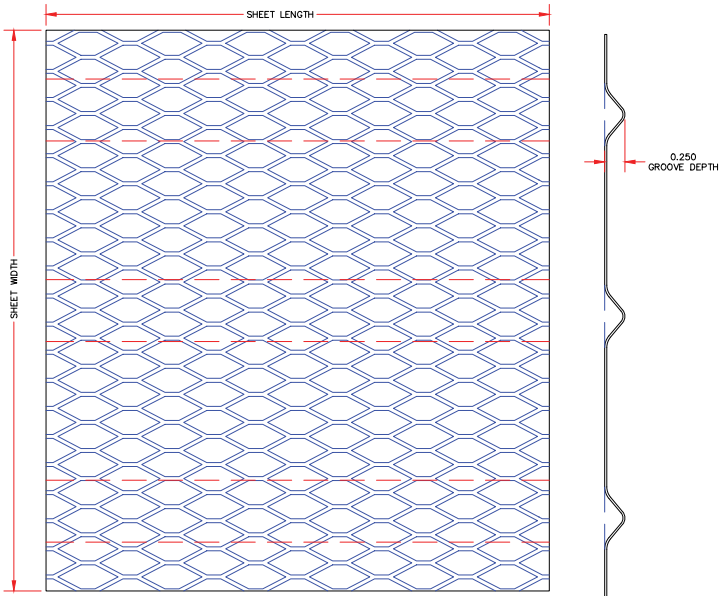

WEIGHT/ SQ YD	SHEET SIZE	PCS/ BNDL	BNDLS/ PALLET
2.5	27″ x 97″	10	25
3.4	27″ x 97″	10	25

500 SQ YDS/PALLET
STANDARD G60 COATING. G90 AVAILABLE UPON REQUEST.

The Niles V-Groove Metal Lath, provides a 1/4" V-Groove indentation running the length of the metal lath, furring the lath away from the sheathing base. There are six grooves on each sheet to provide ample keying for scratch coat applications.

PAPER BACK LATH

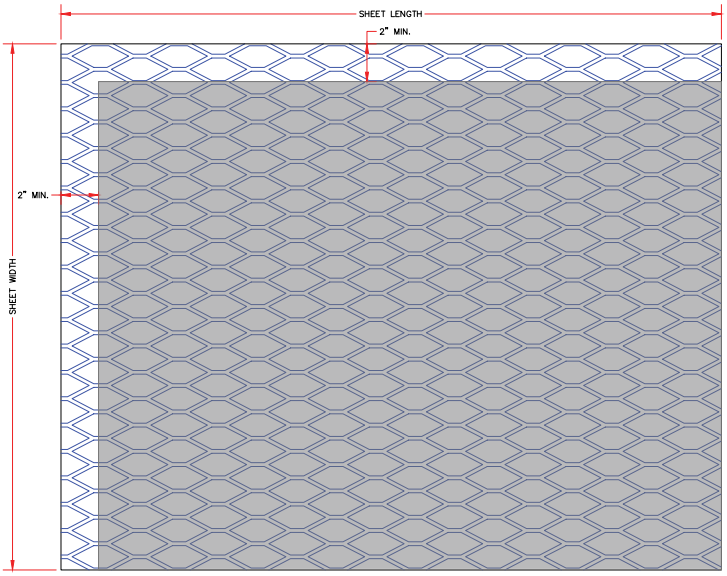

WEIGHT/ SQ YD	SHEET SIZE	PCS/ BNDL	BNDLS/ PALLET
2.5*	27″ x 97″	10	25
3.4*	27″ x 97″	10	25

500 SQ YDS/PALLET
STANDARD G60 COATING. G90 AVAILABLE UPON REQUEST.
*Weight per square yard does not include paper.

The Niles Paper Back Lath is fully backed with Type-1, Grade ‘D’, Style-2 asphalt paper that meets or exceeds federal specifications NO. UU-B-790A. Paper is offset for easier lapping.

Available in Flat, Dimpled and V-Groove.

3/8" HI-RIB LATH

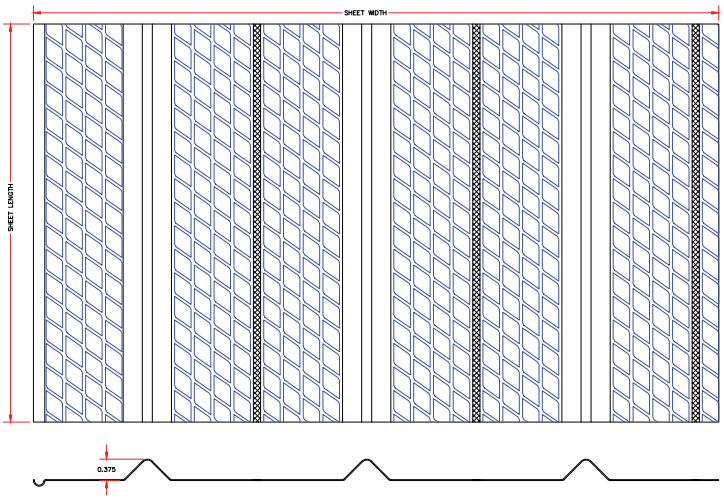

WEIGHT/ SQ YD	SHEET SIZE	PCS/ BNDL	BNDLS/ PALLET
3.4	27" x 97"	10	50

1000 SQ YDS/PALLET

The most rigid of all metal laths; manufactured with 3/8" rib running lengthwise and a 1/8" rib between them. The Hi-Rib Lath is able to span up to 24" on center. Ideal for both vertical and horizontal applications.

ZINC LATH

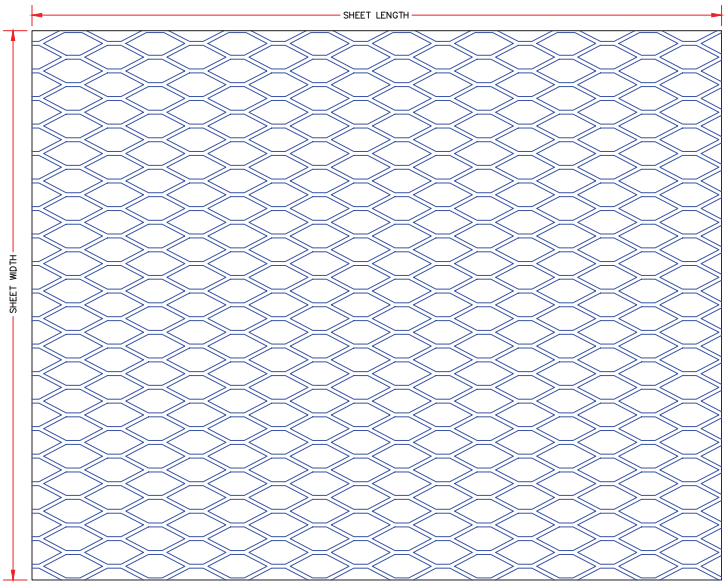

WEIGHT/ SQ YD	SHEET SIZE	PCS/ BNDL	BNDLS/ PALLET
2.5	27" x 97"	10	25
3.4	27" x 97"	10	25

500 SQ YDS/PALLET

The Niles Zinc Metal Lath provides better corrosion resistance for both specialty and conventional stucco applications. Well suited for coastal applications where salt water and moisture are a concern.

Available in Self-Furring and Paperback, call plant for details.

Plaster/Drywall Accessories

NILES MINI-BEAD 800/900

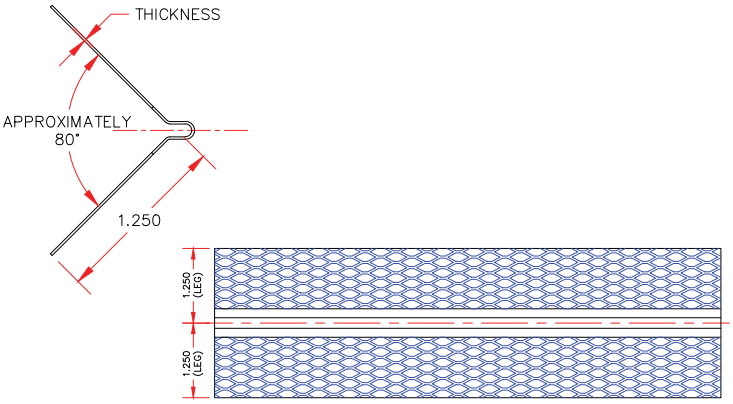

Wing size 1-1/4" x 1-1/4". Used to provide a straight and true reinforced corner for veneer plaster and drywall applications. Manufactured from hot-dipped galvanized steel, these beads can be nailed, stapled or clinched. The fine mini-mesh flanges allow for excellent bonding to veneer plaster or drywall finishing compound. Available in 8' and 10' lengths.

NILES MINI-BEAD 800/900	CRTNS/ PALLET	NOMINAL LBS/ CRTN	NOMINAL WT/ PALLET*
MINI-BEAD 8'	25	44	1100
MINI-BEAD 9'	25	52	1300
MINI-BEAD 10'	25	54	1350

8' Corner Bead 60 PCS/CRTN – 480 FT/CRTN
9' Corner Bead 60 PCS/CRTN – 540 FT/CRTN
10' Corner Bead 60 PCS/CRTN – 600 FT/CRTN
STANDARD G40 COATING
*Pallet weights may vary.

NILES 'L'-TRIM & NILES 'J'-TRIM

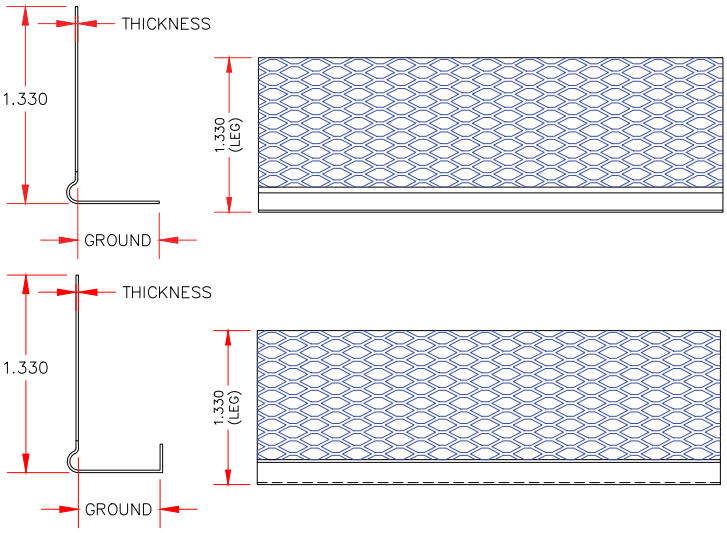

Niles 'L'-Trim is used to provide a protective edge for either drywall or veneer gypsum board and plaster, or for gypsum finish edges. It provides a fine mini-mesh flange for bonding of veneer plaster or gypsum finishing compound.

Niles 'J'-Trim is similar to our 'L'-Trim, but with a return lip to provide a complete protective edge around the gypsum board.

NILES 'L' & 'J' TRIMS	CRTNS/ PALLET	NOMINAL LBS/ CRTN	NOMINAL WT/ PALLET*
Niles 'L'-Trims 1/2" & 5/8" – 10'	60	45	2700
Niles 'J'-Trims 1/2" & 5/8" – 10'	63	49	3087

50 PCS/CRTN – 500 FT/CRTN
STANDARD G40 COATING
*Pallet weights may vary.

NILES 093 ZINC CONTROL JOINT

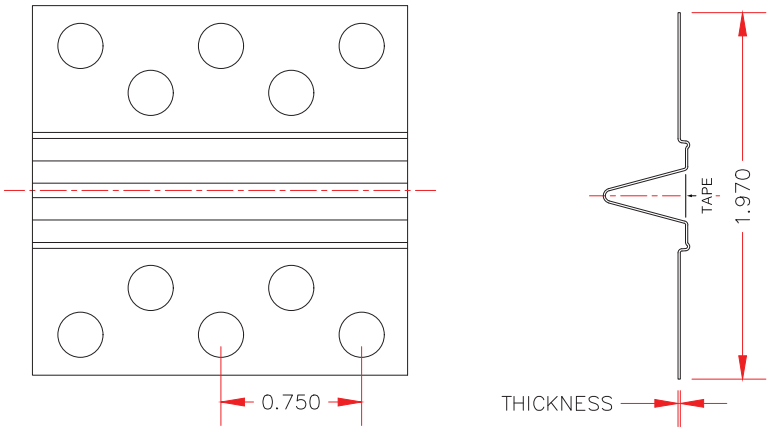

CRTNS/ PALLET	NOMINAL LBS/CRTN	NOMINAL WT/ PALLET*
20	32	640

25 PCS/CRTN – 250 FT/CRTN
*Pallet weights may vary.

Niles 093 Zinc Control Joints are used for large expanses of ceiling and wall areas, both drywall and veneer. Excellent for large partitions and from door headers to ceilings. Tape protects 1/4" openings, 7/16" deep; 3/32" grounds. Comes pre-taped to ensure a clean finish.

Note: A sure seal behind joints must be placed where fire ratings are observed and sound transmissions are a factor.

Drywall Framing Accessories

NILES DRYWALL CORNER BEAD

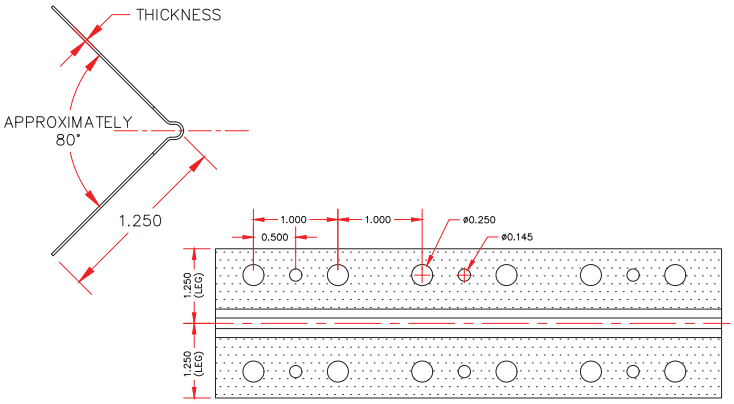

LENGTH	PCS/CRTN	FT/CRTN	CRTNS/ PALLET
8″	63	504	49
9″	56	504	49
10″	50	500	49
12″	42	504	49

NOMINAL WEIGHT/CRTN – 56 LBS, NOMINAL WEIGHT/PALLET – 2744 LBS
STANDARD G40 COATING

Niles Building Products' Drywall Corner Bead is an extremely durable, hot-dipped galvanized bead that provides superior corrosion protection. Flanges are deeply knurled for excellent joint compound adhesion. Ideal for high traffic areas, this drywall finishing corner bead is easily installed by using drywall nails, staples, screws or clinching tool.

NILES RESILIENT CHANNEL

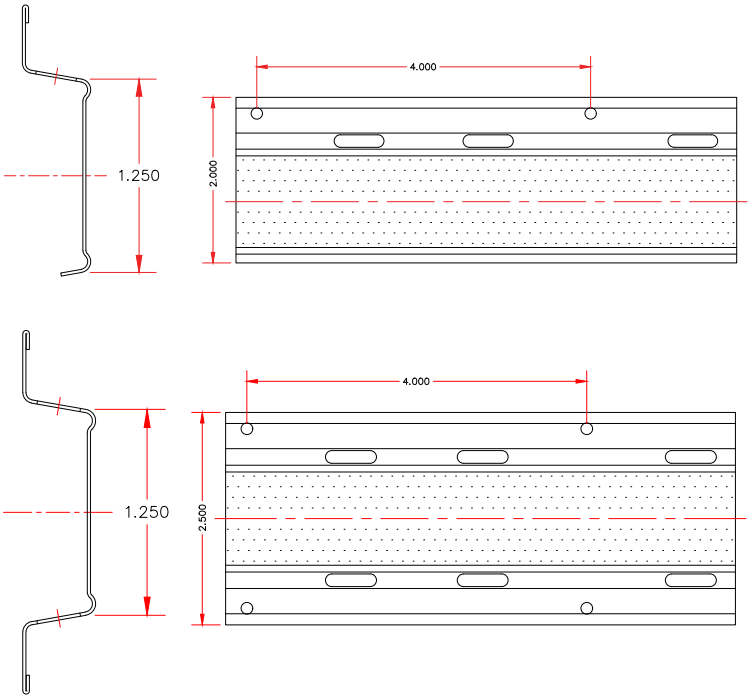

NILES RESILIENT CHANNEL	SIZE	LENGTH	PCS/ BNDL
RC-1 ONE LEG, 25 GAUGE	1/2″ x 2″	12'	20
RC-2 TWO LEGS, 25 GAUGE	1/2″ x 2-1/2″	12'	20

50 BNDLS/PALLET
STANDARD G40 COATING

Niles Resilient Channel reduces transmission of airborne sound through partition and ceiling assemblies. The resilient channel dampens sound waves effectively, dissipating the energy and reducing sound transmission.

NILES FURRING CHANNEL

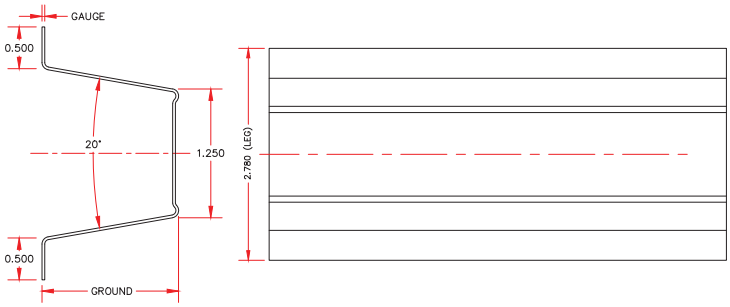

Available in two sizes, the Niles Furring Channel is used as a cross furring member for attachment of gypsum wallboard or lath on ceilings or furred masonry walls.

SIZE	GAUGE	LENGTH	PCS/BNDL
7/8″ x 2-1/2″	25	10′ & 12′	10
7/8″ x 2-1/2″	20	10′ & 12′	10
1-1/2″ x 2-3/4″	25	10′ & 12′	10
1-1/2″ x 2-3/4″	20	10′ & 12′	10

50 BNDLS/PALLET
STANDARD G40 COATING

U-CHANNEL CRC (COLD ROLLED CHANNEL)

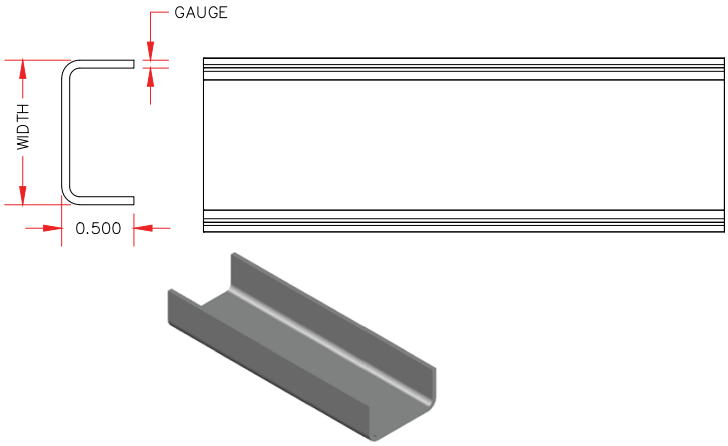

SIZE	LENGTH	PCS/ BNDL	WEIGHT/ BNDL	WEIGHT/ PALLET*
3/4″	10′	20	50 lbs	1000 lbs
3/4″	16′	20	80 lbs	1600 lbs
1-1/2″	10′	10	45 lbs	900 lbs
1-1/2″	16′	10	75 lbs	1500 lbs

20 BNDLS/PALLET
*Pallet weights may vary

Available in 16 gauge.

U-Channel CRC (Cold Rolled Channel) is most commonly used as a bridging method to provide bracing in metal framing systems.

Note: Cold Rolled Channel will not provide adequate bracing if not properly attached to the framing member.

NILES FLAT STOCK

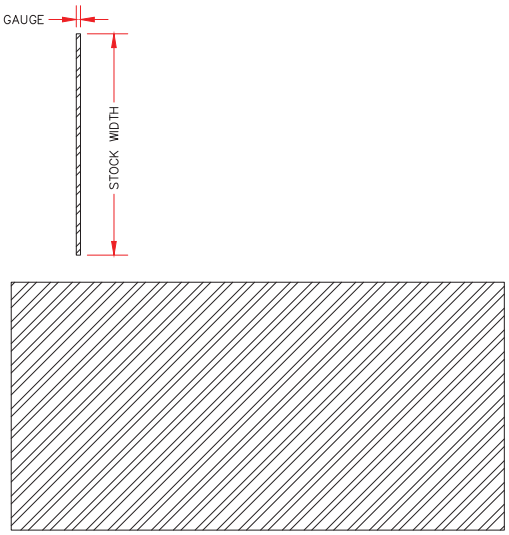

SIZE	GA (MIL)	COATING	MIN. YIELD STRENGTH	PCS/ BNDL	BNDLS/ PALLET
2", 4", 6"	25 (18)	G40	33ksi	10	20
2", 4", 6"	20 (30)	G40	33ksi	10	20
2", 4", 6"	20 (33)	G60	33ksi	5	40
2", 4", 6"	18 (43)	G60	33ksi	5	40
2", 4", 6"	16 (54)	G60	50ksi	5	40

10' Lengths
200 PCS/PALLET

Flat strapping is used for lateral bracing, joist bridging and diagonal bracing to prevent racking.

NILES CORNER ANGLE

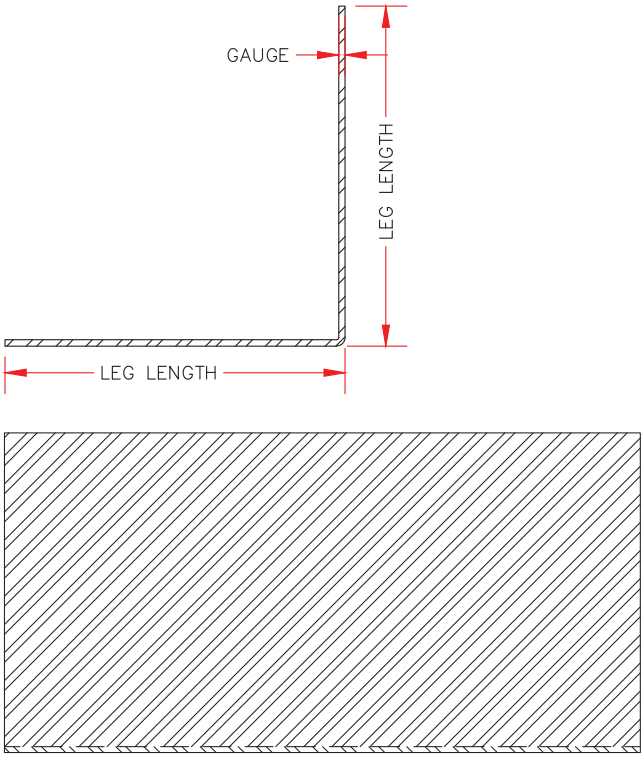

SIZE	GA (MIL)	COATING	MIN. YIELD STRENGTH	PCS/ BNDL	PCS/ PALLET
1-1/2", 2", 3"	25 (18)	G40	33ksi	10	500
1-1/2", 2", 3"	20 (30)	G40	33ksi	10	500
1-1/2", 2", 3"	20 (33)	G40	33ksi	5	250
1-1/2", 2", 3"	18 (43)	G60	33ksi	5	250
1-1/2", 2", 3"	16 (54)	G60	50ksi	5	250

10' Lengths
50 BNDLS/PALLET

Niles Corner Angle is produced for miscellaneous attachments of intersecting framing components and right angle corner enclosures.

Security Panels

EXPANDED METAL SECURITY PANEL

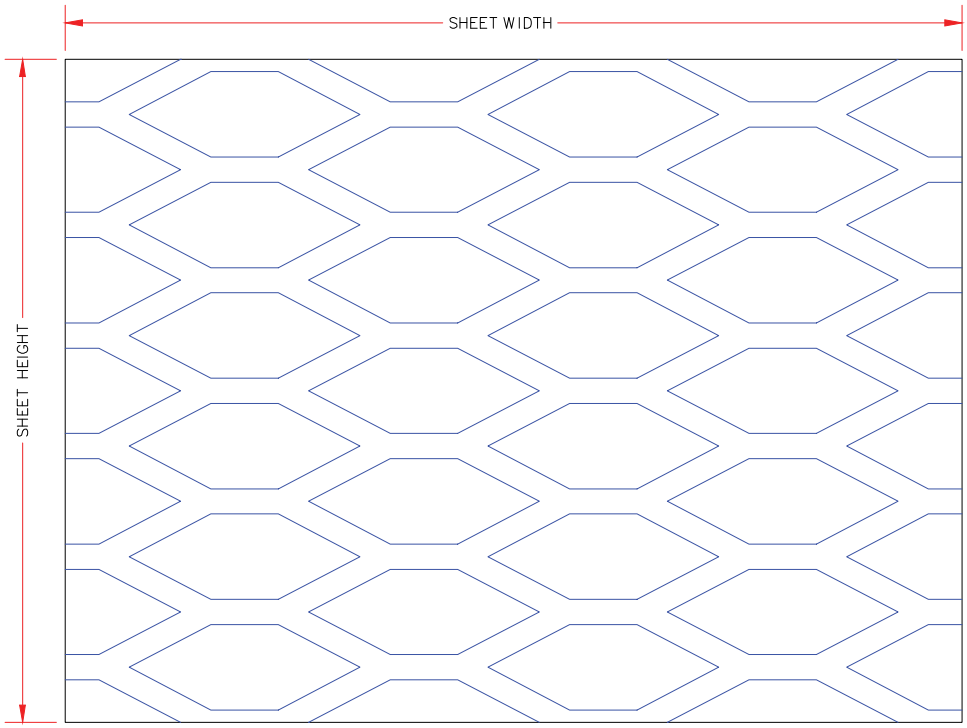

SIZE	WEIGHT/ SHEET
1/2" - #18	21 lbs
1/2" - #16	26 lbs
1/2" - #13	39 lbs
3/4" - #16	19 lbs
3/4" - #13	28 lbs
3/4" - #9	62 lbs
3/4" - #9 HLSM	77 lbs
1-1/2" - #16	15 lbs
1-1/2" - #13	21lbs
1-1/2" - #9	40 lbs

The Expanded Metal Security Panel is used to provide strength and security to interior partitions, floors and ceilings. Standard expanded panels are attached to framing with Security Clips and create a steel barrier behind the finished drywall.

Product features and benefits include:

- can be used accommodate all wall heights and configurations
- attaches easily to all framing and joists
- used in banks, panic rooms, retail stores and government buildings
- available in Uncoated, Galvanized or Stainless Steel

Sheet size 48" x 96".
Available in Standard and Flattened.
Security Clips are used to attach panels quickly and easily to framing and joists.
Security Clips sold 300 PCS/BOX.

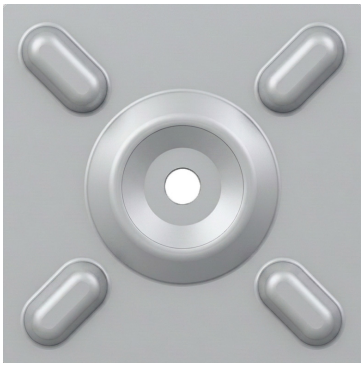

Niles Security Clips

- Produced from .018 G40 min. Hot dipped galvanized steel.
- Dimensions: 1-3/4" x 2" nominal.
- 300 pieces per box.

Stainless Steel Products

NILES STAINLESS STEEL FLAT LATH

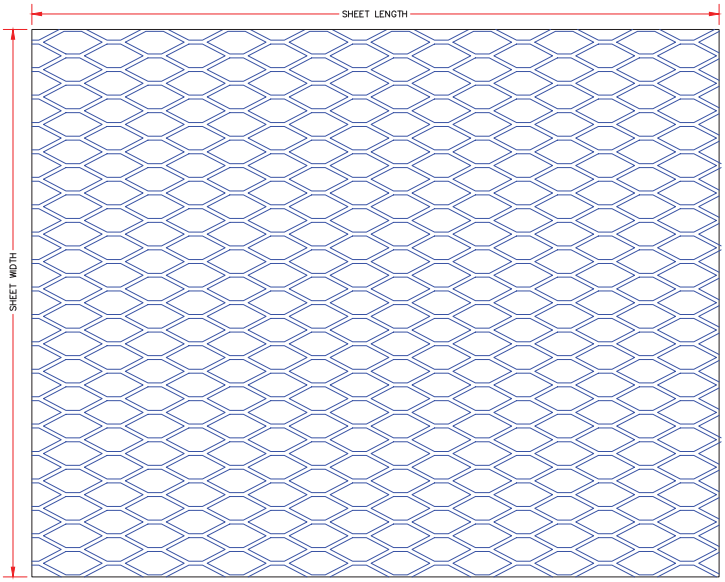

WEIGHT/ SQ YD	STAINLESS STEEL TYPE	SHEET SIZE	SHEETS/ BNDL
2.5	304/316	27" x 97"	10
3.4	304/316	27" x 97"	10

The Niles Stainless Steel Flat Lath is a versatile metal lath ideal as a plaster base and reinforcement for all types of walls, ceilings, ornamental figures and fireproofing of steel beams and columns.

Also available in Dimpled.

NILES STAINLESS STEEL 1-A CORNER BEAD

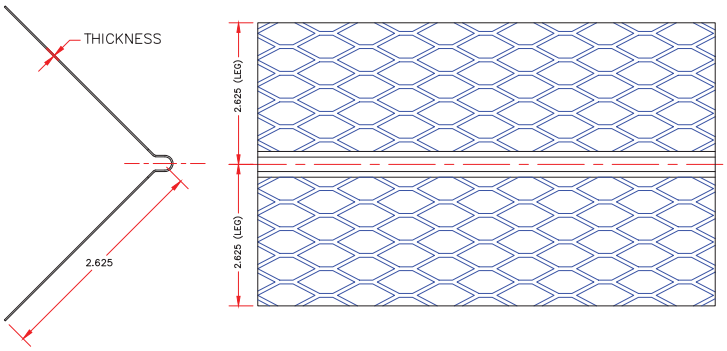

NILES STAINLESS STEEL NO. 1-A CORNER BEAD	STAINLESS STEEL TYPE	PCS/ CRTN
10′	304 or 316	30

300 FT/CRTN

The Niles Stainless Steel 1-A Corner Bead is used to reinforce external corners in Portland cement stucco applications.

NILES STAINLESS STEEL NO. 66X CASING BEAD

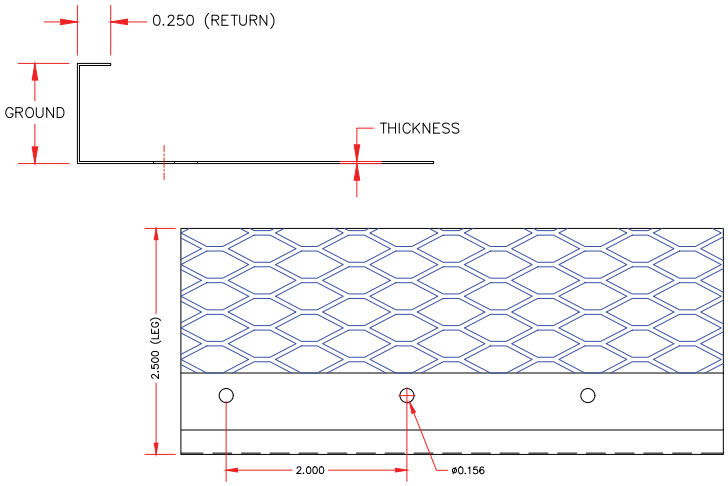

NILES STAINLESS STEEL NO. 66X EXPANDED FLANGE	STAINLESS STEEL TYPE	PCS/ CRTN
1/2" & 3/4"	304 or 316	30

300 FT/CRTN

The Niles Stainless Steel No. 66X Casing Bead is used to effectively terminate plaster edge and/or to separate stucco from all other structural membranes at doors, windows and other openings.

NILES STAINLESS STEEL DOUBLE 'J' EXPANSION CONTROL JOINT

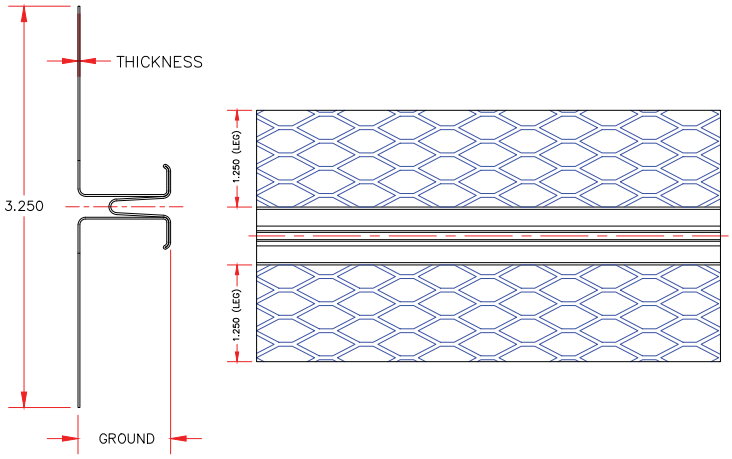

NILES STAINLESS STEEL DOUBLE 'J' EXPANSION CONTROL JOINT	STAINLESS STEEL TYPE	PCS/ CRTN
1/2" & 3/4"	304 or 316	24

240 FT/CRTN

The Niles Stainless Steel Double 'J' Expansion Control Joint is used to provide mechanism for movement to accommodate expansion and contraction caused by initial stucco shrinkage and minor thermal movement.

NILES STAINLESS STEEL DOUBLE 'V' EXPANSION CONTROL JOINT

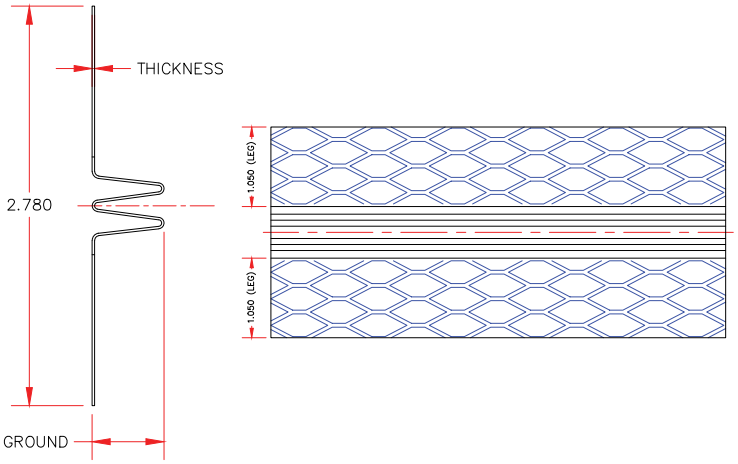

NILES STAINLESS STEEL DOUBLE 'V' EXPANSION CONTROL JOINT	STAINLESS STEEL TYPE	PCS/ CRTN
1/2" & 3/4"	304 or 316	24

240 FT/CRTN

The Niles Stainless Steel Double 'V' Expansion Control Joint is used to provide a mechanism for movement to accommodate expansion and contraction caused by initial stucco shrinkage and minor thermal movement.

NILES STAINLESS STEEL #7 FHA FOUNDATION WEEP SCREED

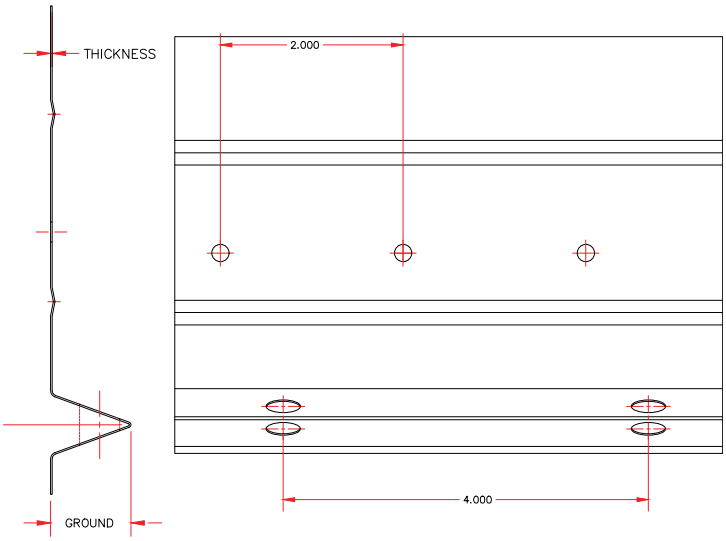

NILES STAINLESS STEEL #7 FHA FOUNDATION WEEP SCREED	STAINLESS STEEL TYPE	PCS/ CRTN
1/2" & 3/4"	304 or 316	25

250 FT/CRTN

The Niles Stainless Steel #7 FHA Foundation Weep Screed is used to provide a weep mechanism as part of the drainage system as required at the bottom of all framed walls; by all major building codes and the International Building Code in ASTM C1063. The larger holes in the ground flange are bonding holes as the entire surface of the sloped ground provides for drainage once the stucco has hydrated and shrinkage has occurred.

Specifications

Metal Lath & Accessories

HOT DIPPED GALVANIZED:

ASTM A1003 Standard specification for steel sheet, carbon, metallic and nonmetallic-coated for cold-formed framing members

ASTM A653 Standard specification for steel sheet zinc coated (galvanized) or zinc iron alloy coated (galvanized) by the hot-dip process

ASTM C645 Standard specification for non-structural steel framing members

ASTM C754 Standard specification for installation of steel framing members to receive screw-attached gypsum panel products

ASTM C841 Standard specification for installation of interior lath and furring

ASTM C847 Standard specification for metal lath (2.5 & 3.4 only)

ASTM C1047 Standard specification for gypsum wallboard and gypsum veneer base accessories

ASTM C1063 Standard specification for installation of lathing and furring for Portland cement based plaster

ASTM C1861 Standard specification for lathing and furring accessories, and fasteners, for interior and exterior Portland cement based plaster

- All galvanized products produced from G60 hot-dipped galvanized raw material to meet full compliancy for your application needs.
- Full line of G90 hot-dipped galvanized now available. This finish is intended for applications where superior corrosion resistance is required and cost is a consideration. Contact sales for details.

ZINC:

ASTM B69 Standard specification for flat rolled zinc. Approximately 99% pure zinc.

PAPER:

Type 1, Grade “D”, Style 2.
Meets or exceeds federal specifications No. 44-B-790A

STORAGE:

Per ASTM C1063, all metal lath and accessories must be protected from the elements during storage and at job sites.

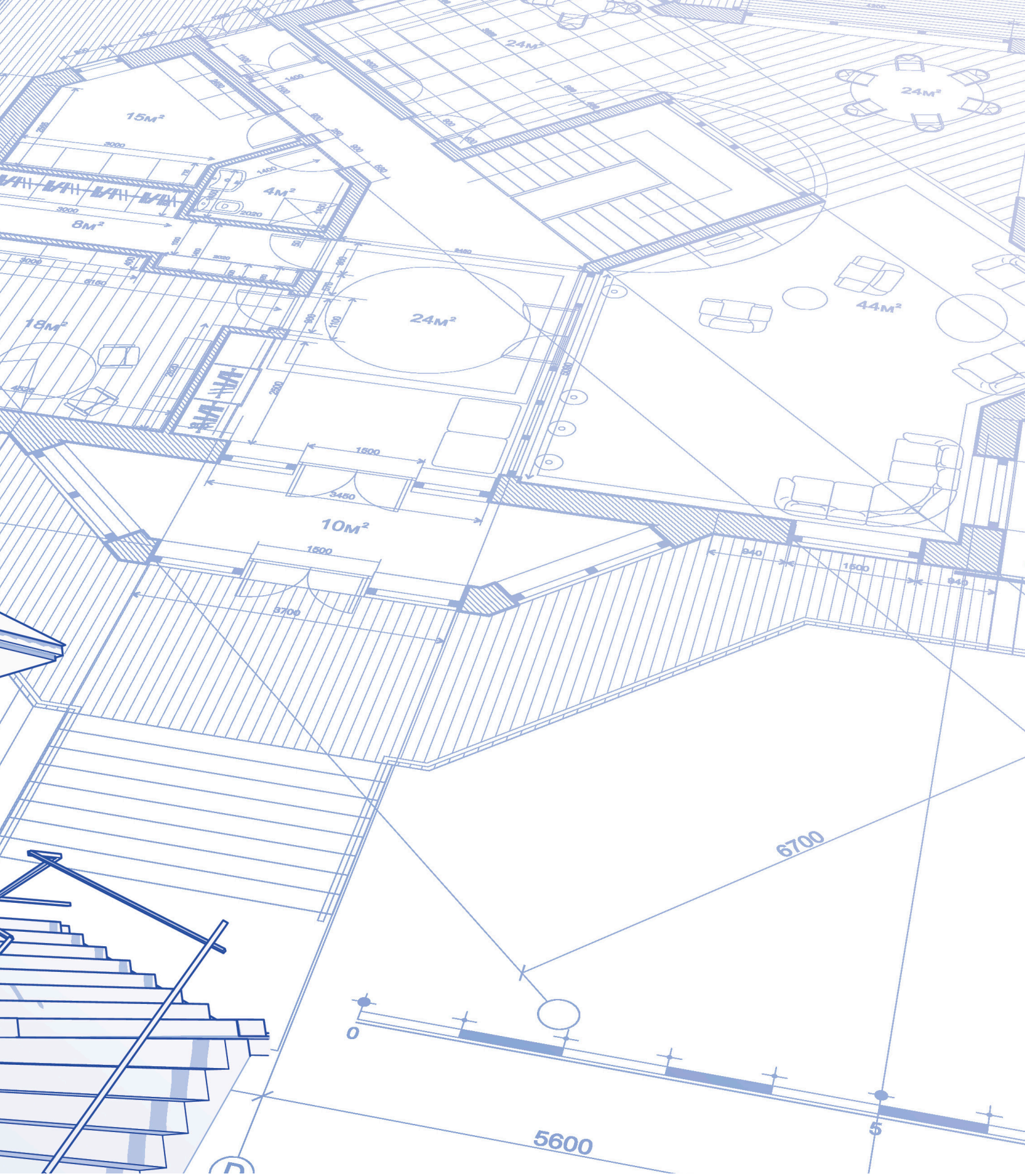
15м²
4м²
8м²
18м²
24м²
24м²
24м²
44м²
10м²
1500
3450
1500
3700
940
1500
940
6700
5600
0
5