NILES BUILDING PRODUCTS

Specialists in Metal and Vinyl Building Products

VINYL ACCESSORIES CATALOG

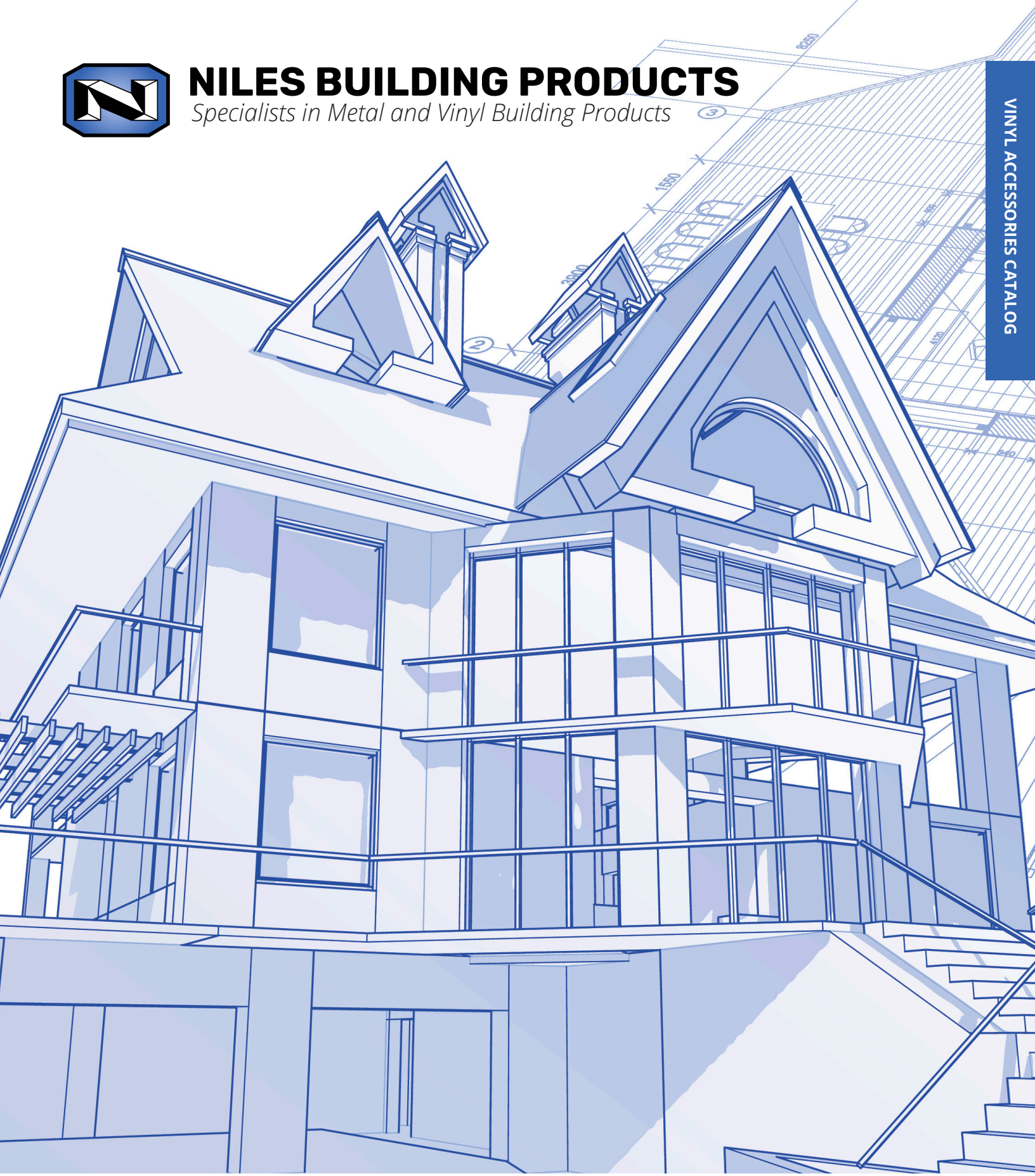

Niles Facility
1600 Hunter Street
Niles, OH 44446

Jacksonville Facility
8441 Western Way
Jacksonville, FL 32256

Dallas-Fort Worth Facility
2303 I-30 Frontage Road Ste 100
Grand Prairie, TX 75050

Southern California Facility
1270 North Grove Street
Anaheim, CA 92806

nilesbldg.com • 800-323-3329

About Niles Building Products

We are the industry leader in manufacturing expanded metal and vinyl accessories for stucco, plaster, drywall and veneer plaster applications.

JACKSONVILLE, FL

NILES, OH

DALLAS-FORT WORTH, TX

ANAHEIM, CA

Incorporated in Niles, OH in 1973 with just one production line and four employees, Niles Building Products has grown to become an industry leader in expanded metal and vinyl accessories—with manufacturing facilities in Niles, OH, Jacksonville, FL, Grand Prairie, TX, and Anaheim, CA.

Niles Building Products is a service-oriented company, focused on high quality products while maintaining low overhead. Our distinction and reputation in the walls and ceilings industry are defined by the personal attention we give every inquiry and order.

Expanded metal and vinyl building products are our specialty. Our skills and experience are the key to manufacturing products that maintain the exemplary quality levels our customers expect and depend upon. Our customers have come to depend on us to provide high quality products, competitively priced and delivered in a timely fashion. Make Niles Building Products your first choice in expanded metal and vinyl products.

ASTM INTERNATIONAL MEMBER

FWCCA

AWCI

TLPCA

Table of Contents

EIFS/DIRECT APPLIED

Niles Vinyl EIFS Casing/Starter page 4
Niles Vinyl Window/Door Drip Edge page 4
Niles Vinyl 093 Control Joint page 5
Niles Vinyl Direct Applied Casing/Starter page 5

STUCCO ACCESSORIES

Niles Vinyl No. 66X Expanded Flange Casing Bead page 6
Niles Vinyl Reinforced No. 66X Expanded Flange Casing Bead page 6
Niles Vinyl 1-A Corner Bead page 6
Niles Vinyl 1-A Corner Bead 4" Wing page 7
Niles Vinyl 1-A Corner Bead Unequal Leg page 7
Niles Vinyl Double 'V' Expansion Control Joint page 8
Niles Vinyl J Weep page 8
Niles Vinyl Midwall page 9
Niles Masonry Weep Screed PF page 9
Niles Vinyl #7 FHA Foundation Weep Screed page 10
Niles Vinyl #7 FHA Foundation Weep Screed Unequal Leg page 10
Niles Vinyl 3" Continuous Soffit Vent 3/4" Ground page 11
Niles Vinyl 3" F-Soffit 3/4" Ground page 11
Niles Vinyl Drip Screed page 12

SPECIFICATIONS

Vinyl Accessories for Stucco/EIFS page 11

EIFS/Direct Applied

NILES VINYL EIFS CASING/STARTER

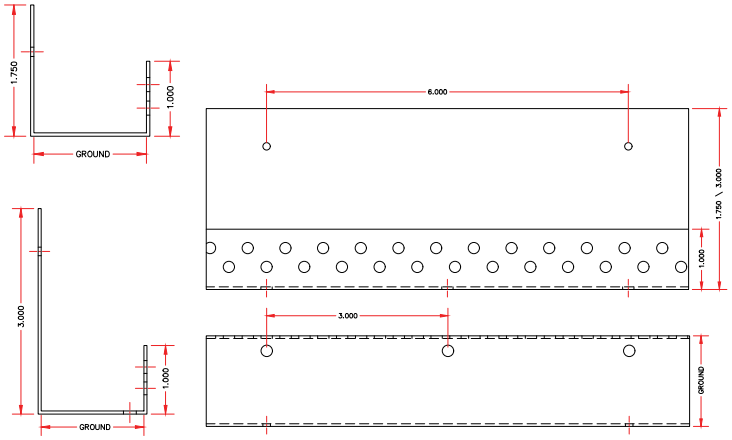

Niles Vinyl EIFS Casing/Starter is to be used at the base of the wall for EIFS applications. They may also be used as an EIFS casing bead around window and door openings.

NILES VINYL EIFS CASING/STARTER	ATTACHMENT FLANGE	PCS/ CRTN	CRTNS/ PALLET
1″	1-3/4″	40	25
1-1/2″	1-3/4″	40	25
2″	1-3/4″	30	25
1″	3″	25	25
1-1/2″	3″	20	25
2″	3″	15	25

10′ LENGTHS

NILES VINYL WINDOW/DOOR DRIP EDGE

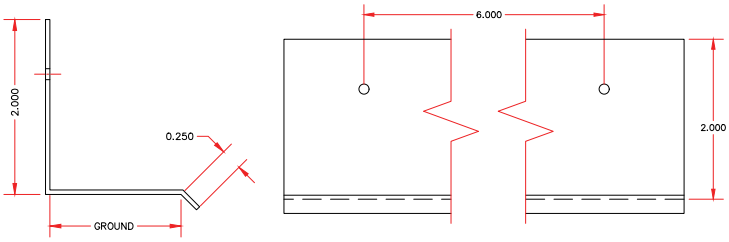

Niles Vinyl Window/Door Drip Edge is used above window and door openings to allow moisture to travel down the surface and not enter into the framing.

NILES VINYL WINDOW/DOOR DRIP EDGE	ATTACHMENT FLANGE	PCS/ CRTN	CRTNS/ PALLET
1″	2″	75	25
1-1/2″	2″	60	25
2″	2″	50	25

10′ LENGTHS
AVAILABLE IN: WHITE, GREY, TAN, BROWN AND DARK BROWN

NILES VINYL 093 CONTROL JOINT

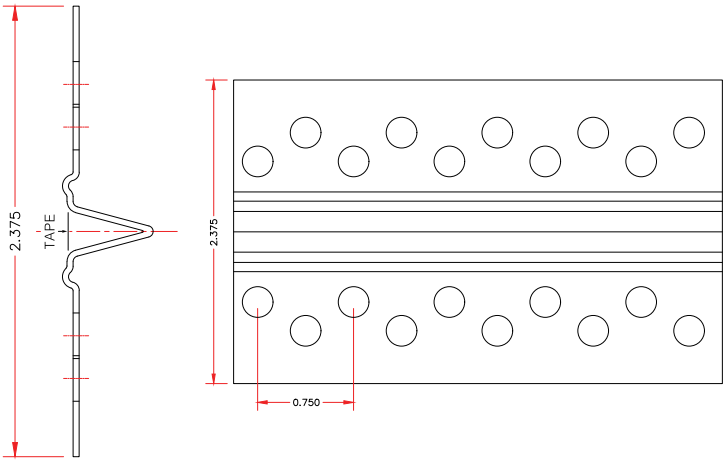

NILES VINYL 093 CONTROL JOINT	PCS/CRTN	CRTNS/ PALLET
1/2″	60	25

10′ LENGTHS

Niles Vinyl 093 Control Joint is used to relieve stress caused by expansion and contraction within the system. Comes pre-taped to ensure a clean finish.

NILES VINYL DIRECT APPLIED CASING/STARTER

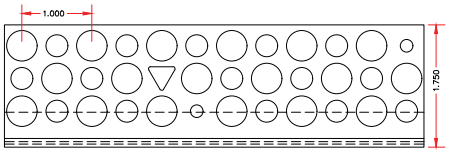

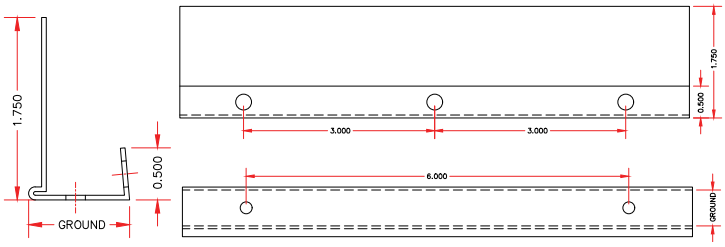

NILES VINYL DIRECT APPLIED CASING/STARTER	ATTACHMENT FLANGE	PCS/ CRTN	CRTNS/ PALLET
1/2″	1-3/4″	60	25
5/8″	1-3/4″	60	25

10′ LENGTHS

Niles Vinyl Direct Applied Casing/Starter may be used in direct applied applications at the base of the wall as a starter track or around windows as a casing bead.

Stucco Accessories

NILES VINYL NO. 66X EXPANDED FLANGE CASING BEAD

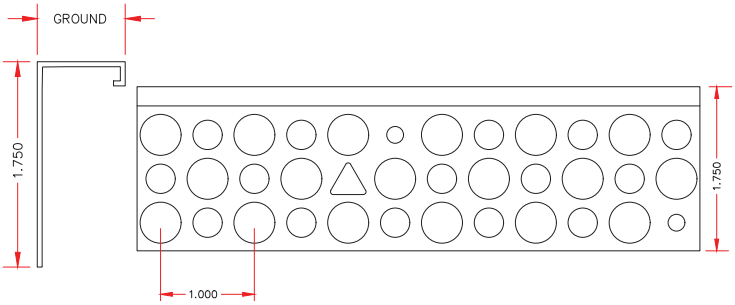

Niles Vinyl No. 66X Expanded Flange Casing Bead is used to effectively terminate plaster edge and/or to separate stucco from doors, windows and dissimilar materials.

NILES VINYL NO. 66X EXPANDED FLANGE CASING BEAD	PCS/CRTN	CRTNS/ PALLET
1/2″	100	25
5/8″	100	25
3/4″	75	25
7/8″	75	25

10′ LENGTHS
AVAILABLE IN: WHITE, GREY, TAN, BROWN AND DARK BROWN

NILES VINYL REINFORCED NO. 66X EXPANDED FLANGE CASING BEAD

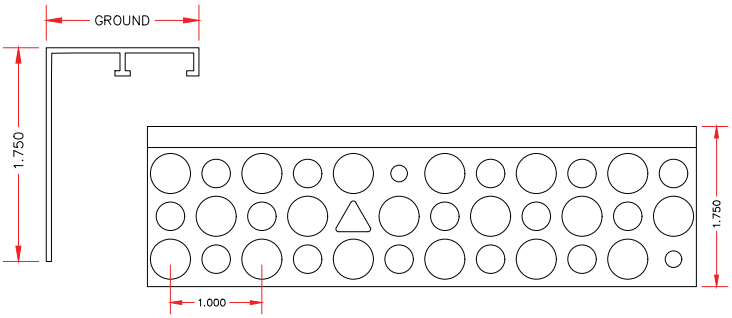

Niles Vinyl Reinforced No. 66X Expanded Flange Casing Bead is designed with a reinforced rib in the ground to assist in keying heavier and/or thicker stucco applications.

NILES VINYL REINFORCED NO. 66X EXPANDED FLANGE CASING BEAD	PCS/CRTN	CRTNS/ PALLET
1″	75	25
1-1/4″	50	25
1-1/2″	50	25
2″	40	25

10′ LENGTHS
AVAILABLE IN: WHITE, GREY, TAN, BROWN AND DARK BROWN

NILES VINYL 1-A CORNER BEAD

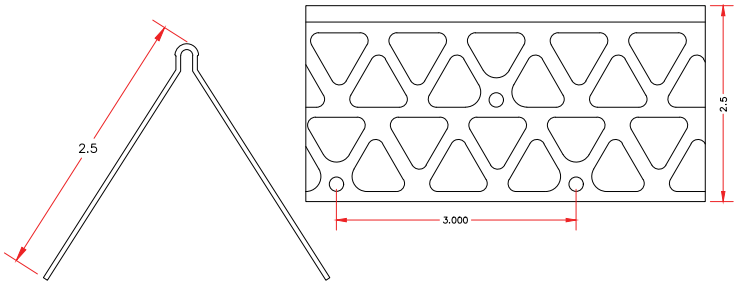

NILES VINYL 1-A CORNER BEAD STANDARD 2-1/2" X 2-1/2"	PCS/CRTN	CRTNS/ PALLET
10'	50	25

Niles Vinyl 1-A Corner Bead provides a rust-proof, high-impact-resistant corner for exterior stucco applications.

NILES VINYL 1-A CORNER BEAD 4" WING

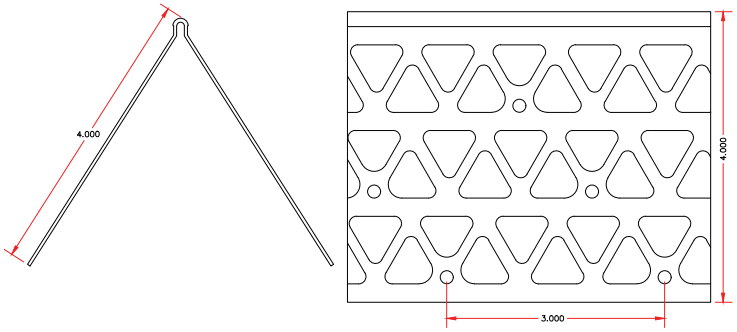

NILES VINYL 1-A CORNER BEAD 4" WING	PCS/CRTN	CRTNS/ PALLET
10'	30	25

Niles Vinyl 1-A Corner Bead 4" Wing is designed for applications with deep fills or irregular corner conditions.

NILES VINYL 1-A CORNER BEAD UNEQUAL LEG

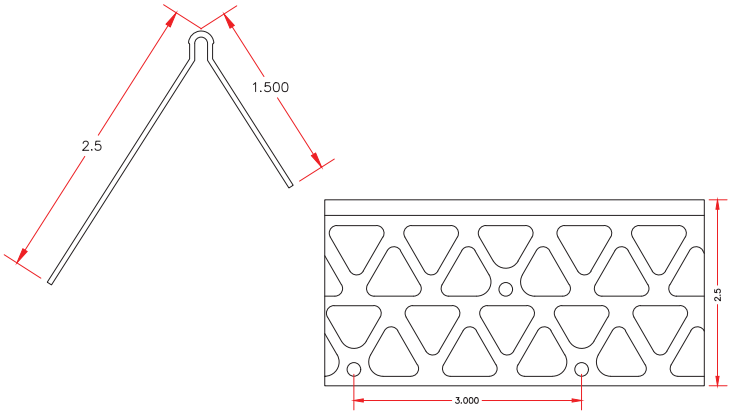

NILES VINYL 1-A CORNER BEAD UNEQUAL LEG 1-1/2" X 2-1/2"	PCS/CRTN	CRTNS/ PALLET
10'	50	25

Niles Vinyl 1-A Corner Bead Unequal Leg has a 1-1/2" flange for narrow returns and for use around windows or decorative applications.

NILES VINYL DOUBLE 'V' EXPANSION CONTROL JOINT

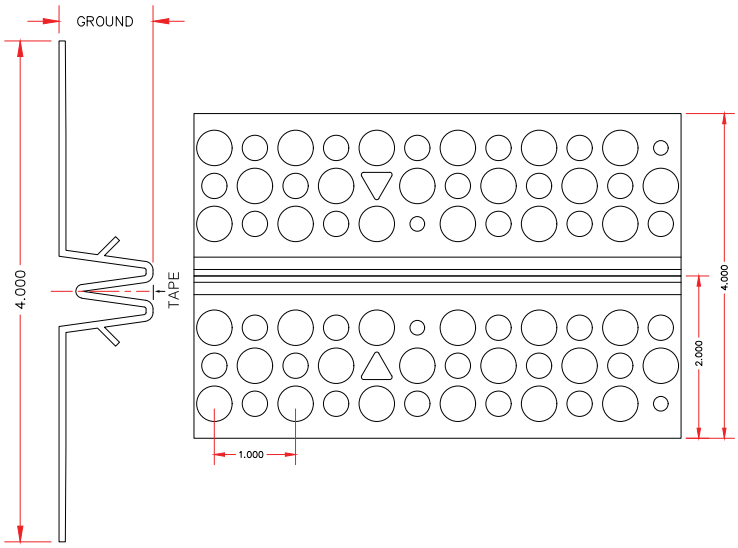

NILES VINYL DOUBLE 'V' EXPANSION CONTROL JOINT	PCS/CRTN	CRTNS/ PALLET
1/2"	35	25
5/8"	30	25
3/4"	30	25
7/8"	20	25

10' LENGTHS

Niles Vinyl Double 'V' Expansion Control Joint used as a mechanism for movement to accommodate expansion and contraction caused by initial stucco shrinkage and minor thermal movement. Comes pre-taped to ensure a clean finish.

NILES VINYL J-WEEP

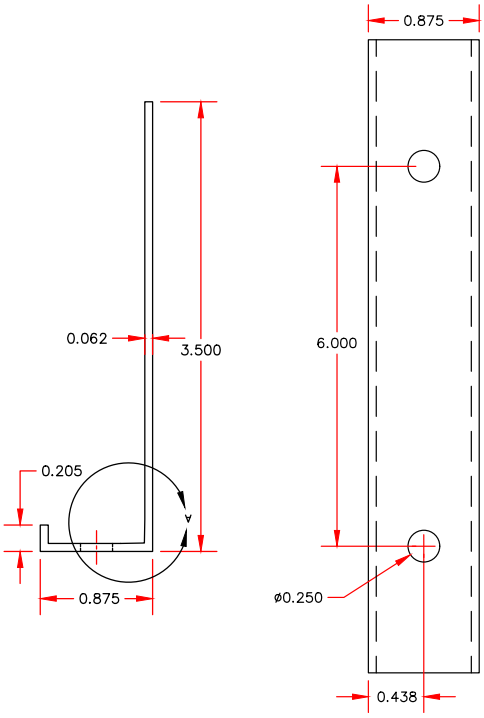

NILES VINYL J-WEEP	PCS/CRTN	CRTNS/ PALLET
7/8"	40	25

10' LENGTHS

Used as a stucco stop with a large flange. The unperforated flange allows for moisture egress from stucco systems. The weather resistive barrier is put over the unperforated flange. It can be used on window heads and along the foundation line in framed construction.

NILES VINYL MIDWALL

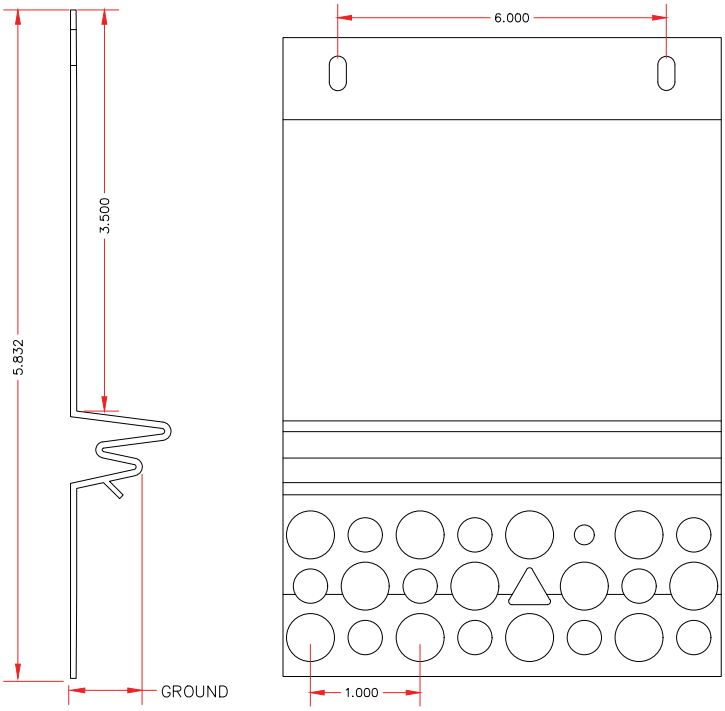

NILES VINYL MIDWALL	PCS/CRTN	CRTNS/ PALLET
1/2"	15	25
5/8"	15	25

10' LENGTHS

Niles Vinyl Midwall is used where two dissimilar materials meet, such as concrete block first floor and wood framing second floor.

NILES MASONRY WEEP SCREED PF (WITH PUNCHED FLANGE)

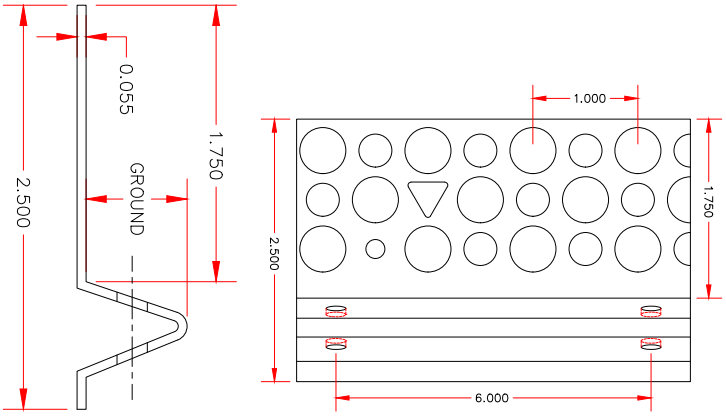

NILES MASONRY WEEP SCREED PF	PCS/CRTN	CRTNS/ PALLET
1/2"	70	25
5/8"	70	25

10' LENGTHS

Niles Masonry Weep Screed PF is to be installed on masonry construction. It is designed to help direct moisture from stucco while providing a plaster stop to cleanly end stucco application.

NILES VINYL #7 FHA FOUNDATION WEEP SCREED

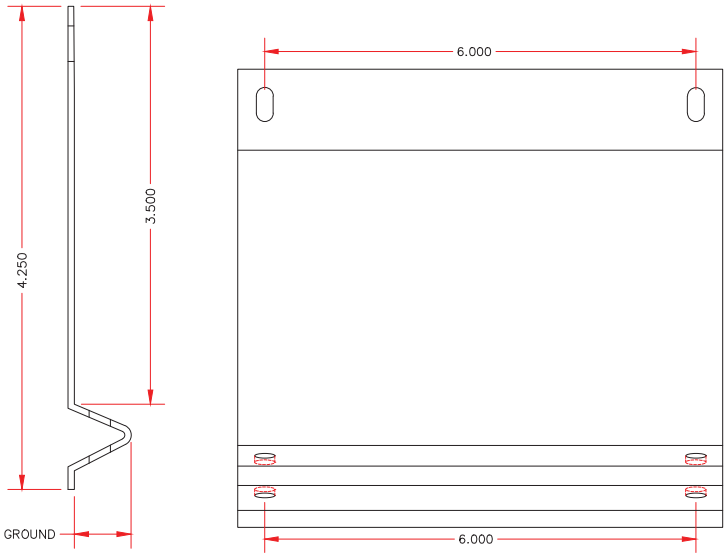

NILES VINYL #7 FHA FOUNDATION WEEP SCREED	PCS/CRTN	CRTNS/ PALLET
1/2″	35	25
5/8″	35	25
3/4″	35	25
7/8″	30	25

10′ LENGTHS
AVAILABLE IN: WHITE, GREY, TAN, BROWN AND DARK BROWN

Niles Vinyl #7 FHA Foundation Weep Screed is manufactured to provide both a ground for plaster finishes and weep holes to allow for moisture to drain properly from the exterior plaster system.

NILES VINYL #7 FHA FOUNDATION WEEP SCREED UNEQUAL LEG

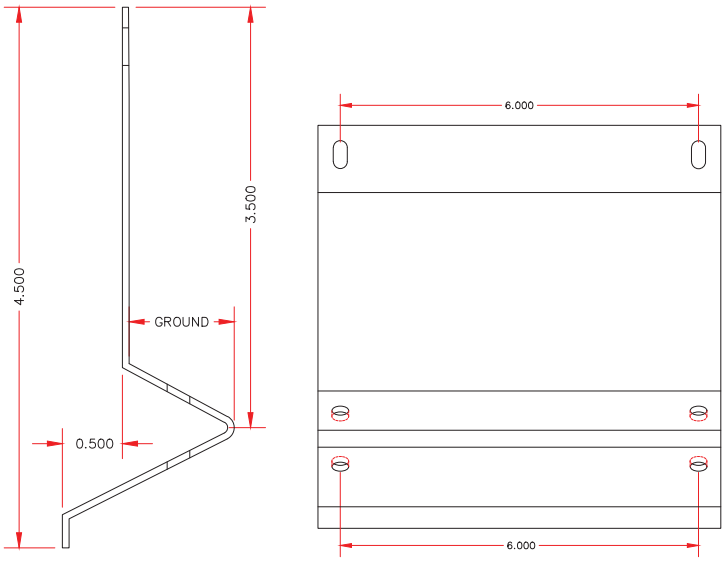

NILES VINYL #7 FHA FOUNDATION WEEP SCREED UNEQUAL LEG	PCS/CRTN	CRTNS/ PALLET
7/8″	30	25

10′ LENGTHS
AVAILABLE IN: WHITE, GREY, TAN, BROWN AND DARK BROWN

Niles Vinyl #7 FHA Foundation Weep Screed Unequal Leg is produced with a longer leg to allow for added depth due to sheathing on the wall. It is used to provide a weep mechanism as part of the drainage system where stucco and foundation walls meet.

NILES VINYL 3" F-SOFFIT 3/4" GROUND

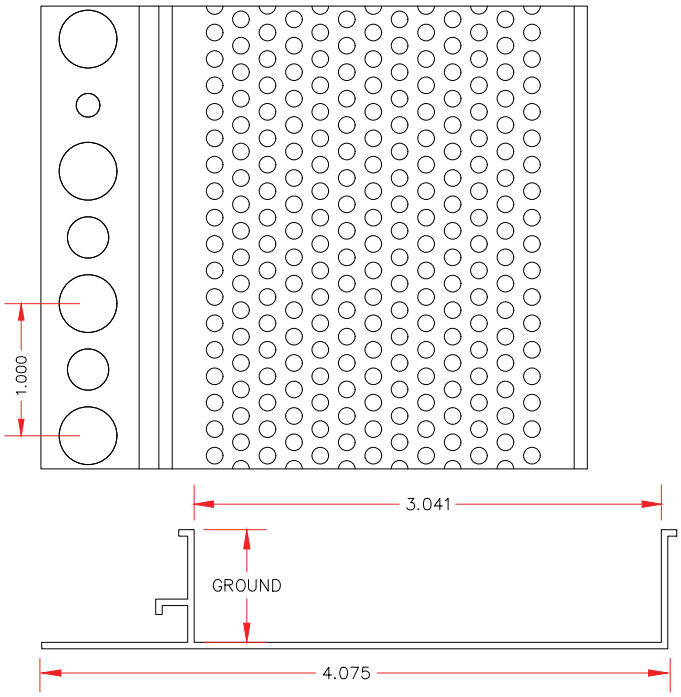

NILES VINYL 3" F-SOFFIT 3/4" GROUND	PCS/CRTN	CRTNS/ PALLET
3/4"	15	25

10' LENGTHS

Niles Vinyl F-Soffit Vent is a one-piece soffit vent with an 'F' profile that is designed with a reinforcing rib to aid in the keying of stucco and plaster.

NILES VINYL 3" CONTINUOUS SOFFIT VENT 3/4" GROUND

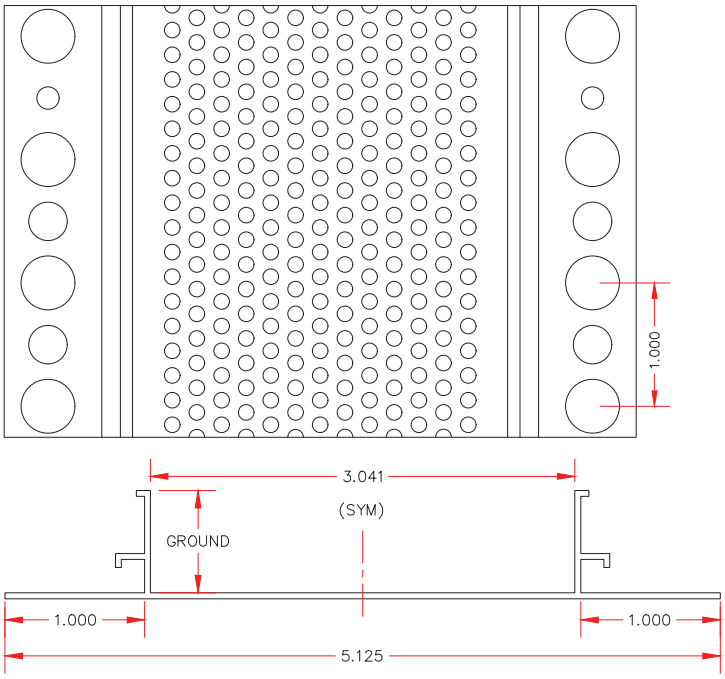

NILES VINYL 3" CONTINUOUS SOFFIT VENT	PCS/CRTN	CRTNS/ PALLET
3/4"	15	25

10' LENGTHS

Niles Vinyl Continuous One-Piece Soffit Vent is designed with a reinforcing rib to aid in the keying of stucco and plaster.

NILES VINYL DRIP SCREED

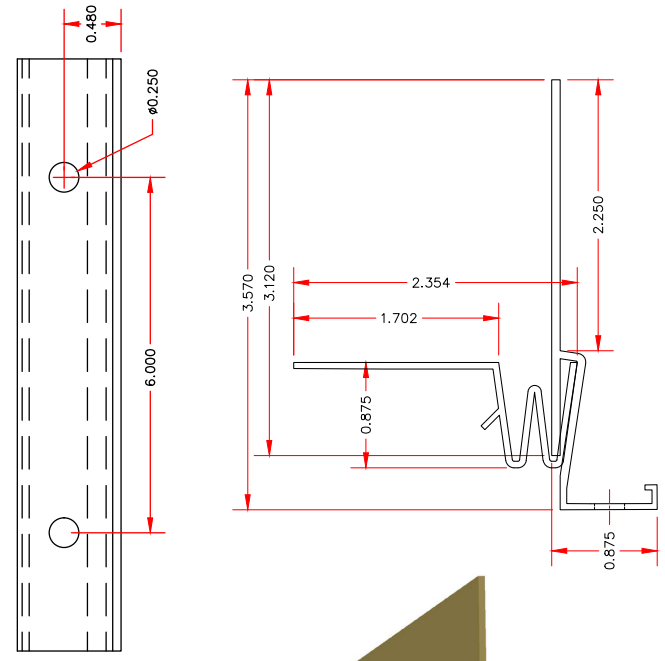

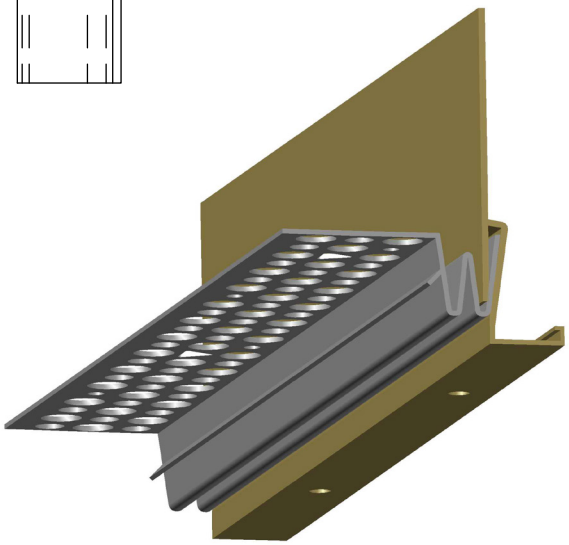

NILES VINYL DRIP SCREED	PCS/CRTN	CRTNS/ PALLET
7/8″	15	25

10′ LENGTHS

Used at the transition point of fascia to soffit or at balconies. It is designed to prevent moisture from traveling back onto the soffit area. The solid vertical flange allows moisture egress from behind the stucco system when the water resistive barrier is placed over it. The perforated J flange allows moisture to weep from the system. The control joint accommodates minor movement between the soffit and fascia areas.

Specifications

Vinyl Accessories for Stucco/EIFS

PRODUCT NAME:

Niles Building Products Rigid Vinyl (PVC) Accessories

MANUFACTURER:

Niles Building Products
1600 Hunter Street
Niles, OH 44446
Phone: (800) 323-3329, (330) 544-0880
Fax: (330) 544-8868

PRODUCT DESCRIPTION:

Niles Building Products extruded vinyl accessories are manufactured for exterior stucco and interior plaster applications. Niles Building Products vinyl accessories are produced using high quality vinyl compounds. Stucco/Plaster accessories include corner and casing beads, control and expansion joints, and weep screeds.

All Niles Building Products vinyl accessories are produced from vinyl compounds that meet ASTM D-4216 and ASTM D-1784.

PRODUCT STANDARDS
All vinyl accessories conform to ASTM C-844, ASTM C-1047 and ASTM D-1784 for interior products or ASTM D-4216, ASTM C-1063 and ASTM C-1861 for exterior stucco products.

LEED
Niles Building Products vinyl accessories are made with a high percent of post-consumer recycled content and provide Credits MR 4.1 and 4.2 – Recycled Content. Additionally, vinyl accessories may provide credits for MR 5.1 and 5.2 – Regional Materials. Contact Niles Building Products for LEED Documentation information.

FLAMMABILITY/FIRE RESISTANCE
Rigid vinyl is self-extinguishing and does not support combustion once the flame source is removed. Therefore, it will not cause a fire to re-start or spread. Rigid vinyl offers better resistance to burning than many other common building materials.

PAINTING VINYL ACCESSORIES
Niles Building Products vinyl accessories have excellent paint adhesion. Accessories surface must be clear of debris and oils prior to painting. Should cleaning be necessary a mild detergent is recommended. Contact the paint manufacturer to determine surface preparation and coating recommendations prior to painting.

INSTALLATION:

Vinyl stucco accessories shall be installed per ASTM standards and prevalent industry standards. Vinyl accessories may be fastened using lath nails, screws or wire ties as described in ASTM C-1063.

All vinyl accessories have adequate perforations that allow the complete embedment and keying of the stucco or plaster. Some accessories have surface ridges that assist in the adhesion of the stucco or plaster.

SEALING AND CAULKING
All butt joints, intersections and ends of vinyl accessories shall be joined, embedded and sealed in a compatible sealant designed for its intended end use and compatible with the exterior paint finish. Consult caulking manufacture for specific recommendations.

WARRANTY:

Niles Building Products vinyl accessories are warranted to the finished product specification in the referenced ASTM standards; ASTM D-1784, D-4216, C-1063, C-1861 and C-1047. This warranty is limited to one year from the date of initial purchase. Niles Building Products does not control installation, workmanship, fastening, complementary materials or climate conditions. Therefore, Niles Building Products sole responsibility under this warranty is for replacement of material only and excludes any labor or installation costs. This warranty applies to material that has been deemed defective through manufacturing only and not product that has been damaged during installation or improperly installed.

STORAGE:

Vinyl accessories shall be protected from the elements prior to installation. Care should be taken to avoid damage to the accessories and not store items on top of them that may deform their shape before using.

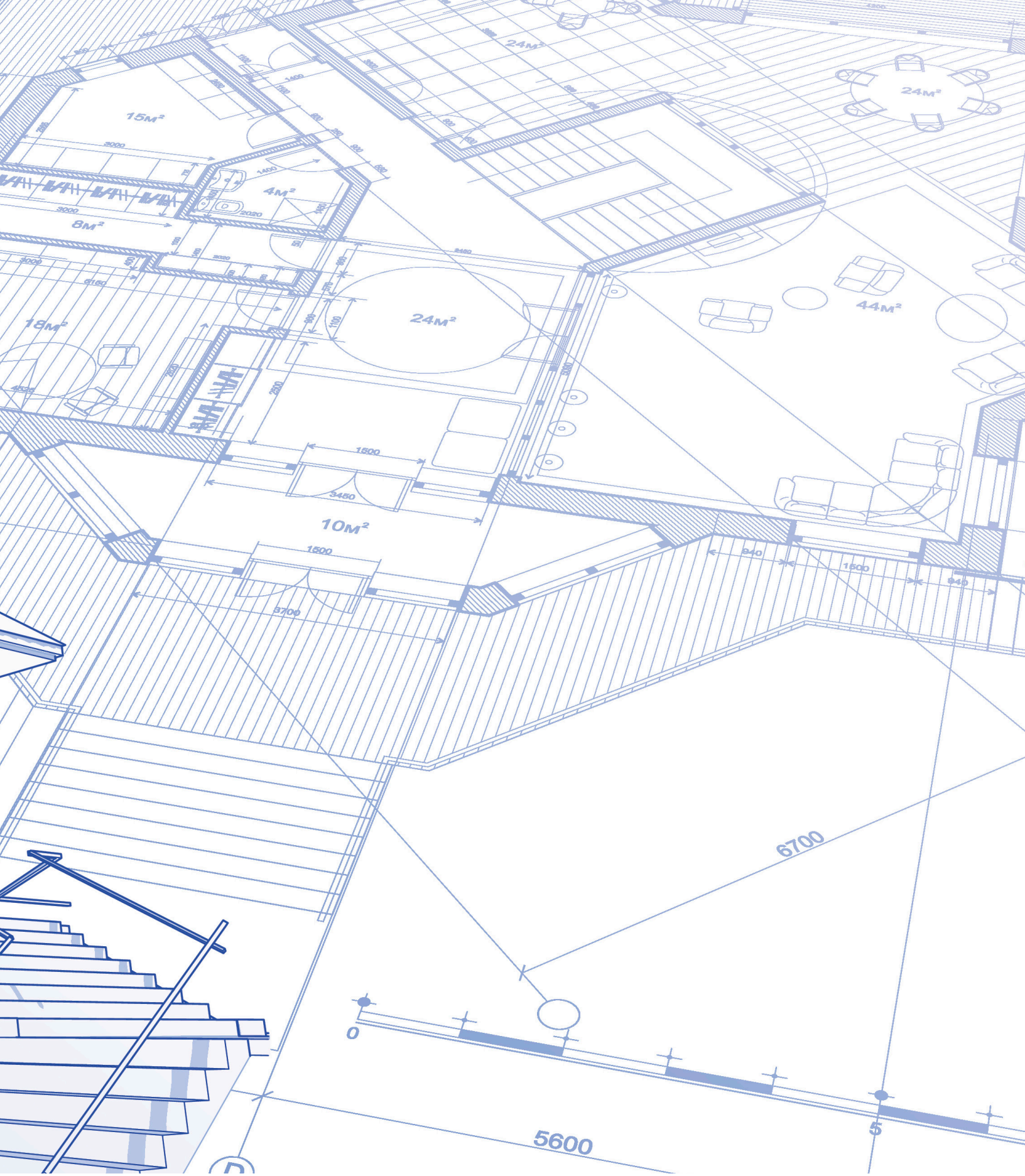
15м²
4м²
8м²
18м²
24м²
24м²
24м²
44м²
10м²
1500
3450
1500
3700
940
1500
940
6700
5600
0
5